BAUMÜLLER



DSP1

Technical documentation
Three-phase synchronous motors DSP1 45-100

E | 5.23018.01

Technical data, motor components, declaration of conformity

Language **English** (Translation)
Document no. 5.23018.01
Status 11/2023

Table of contents

1. Three-phase synchronous motors DSP1-045-100 3
1.1. General technical data 3
1.2. General safety instructions 4
1.3. Definition of ratings 5
1.3.1. Definitions of power ratings for air-cooled machines 5
1.3.2. Definitions of power ratings for water-cooled machines 5
1.4. Water cooling 5
1.4.1. Coolant consistency 5
1.4.2. Min. coolant temperature against ambient temperature and humidity 6
1.4.3. Specifications for required coolant volume flow 8
1.4.4. Materials in the motor that make contact with the product 9
1.5. Winding insulation and heating 9
1.6. Explanation of motor data 9
1.7. Type key 10

2. Technical data 13
2.1. DSP1-045 13
2.2. DSP1-056 14
2.3. DSP1-071 15
2.4. DSP1-100 16
2.5. Vibratory load 18
2.6. Radial force diagrams 19
2.6.1. Sample diagram 19
2.6.2. Diagram DSP1-045 21
2.6.3. Diagram DSP1-056 22
2.6.4. Diagram DSP1-071 24
2.6.5. Diagram DSP1-100 26

3. Motor components (options) 28
3.1. Holding brake 28
3.2. Fan 29
3.3. Encoder 30
3.3.1. (Resolver) 30
3.3.2. Resolver for safety-related applications 31
3.3.3. SINCOS SEK/SEL37 (SICK) 32
3.3.4. SINCOS SRS/SRM50 (SICK) 33
3.3.5. SINCOS SRS/SRM50-S (SICK) 34
3.3.6. EES37/EEM37 Hiperface DSL® (SICK) 35
3.3.7. EFS50/EFM50 Hiperface DSL® (SICK) 36
3.3.8. ECN1313/EQN1325 (Heidenhain) 37
3.3.9. ECI1319/EQI1331 (Heidenhain) 38
3.3.10. ECI1319/EQI1331-S (Heidenhain) 39
3.3.11. ECN1325/EQN1337 (Heidenhain) 40
3.3.12. ECN 1325/EQN1337-S (Heidenhain) 41
3.4. Encoder cables for b maXX 4000 42
3.4.1. Technical data 42
3.4.2. Application references 42
3.4.3. Order information for encoder cables 43
3.5. Encoder cables for b maXX 5000 44
3.5.1. Technical data 44
3.5.2. Order information for encoder cables 44
3.6. Motor cables 45
3.6.1. Technical data 45
3.6.2. Main connection via connector 45
3.6.3. Main connection via terminal boxes 46
3.6.4. Application notes 46
3.6.5. Ordering data for main connection cables 47

3.7. Dimensional drawings for equipment socket and plug....48
3.7.1. Main connection....48
3.7.2. Encoder connection....48
3.8. Thermal sensor....49

4. Dimension drawings....50
4.1. Dimension drawings DSP1-045....50
4.2. Dimension drawings DSP1-056....52
4.3. Dimension drawings DSP1-071....55
4.4. Dimension drawings DSP1-100....60
4.5. Terminal box dimensions....66

5. Motor characteristic curves....67
5.1. Characteristic curves DSP1-045....67
5.1.1. DSP1-045..64U-.. (without fan)....67
5.1.2. DSP1-045..64W-.. (water cooled)....69
5.2. Characteristic curves DSP1-056....71
5.2.1. DSP1-056..64U-.. (without fan)....71
5.2.2. DSP1-056..64O-.. (with fan)....73
5.2.3. DSP1-056..64W-.. (water cooled)....75
5.3. Characteristic curves DSP1-071....77
5.3.1. DSP1-071..64U-.. (without fan)....77
5.3.2. DSP1-071..64O-.. (with fan)....79
5.3.3. DSP1-071..64W-.. (water cooled)....81
5.4. Characteristic curves DSP1-100....83
5.4.1. DSP1-100..64U-.. (without fan)....83
5.4.2. DSP1-100..64O-.. (with fan)....89
5.4.3. DSP1-100..64W-.. (water cooled)....95

6. Commissioning and maintenance instructions....99

7. Declaration of Conformity....100
7.1. EU – Declaration of Conformity....100
7.2. UKCA Declaration of Conformity....102

All the details in this list are non-binding customer information that is subject to ongoing change and continually updated by our editing staff. Please note that all data/figures/information represent current data at the time of going to press. This data is not legally binding for the purposes of dimensioning, computation, or calculation. Before using the information in this document as a basis for your own calculations and/or applications, you must ensure that it is the most up-to-date version of this information.
Therefore, we cannot accept liability for the correctness of the information in this document.

Issue: 11/2023

1. Three-phase synchronous motors DSP1-045-100



For applications with high rotation speed requirements, the DSP1 motors complement the existing DSC series with nominal rotation speeds of up to 6000 min^{-1}. The design is identical to that of the compact DSC synchronous motors and the DSD2 dynamic servo motor series.
DSP motors are particularly well suited for applications in handling axes, processing machines and servo pump drives on account of their good acceleration and overload capacity as well as the increased rotation speed and range of performance.

1.1. General technical data

Version:	IM B5	Horizontal mounting acc. to EN 60034-7
	IM V1	Vertical mounting, shaft end at the bottom acc. to EN 60034-7
	IM V3	Vertical mounting, shaft end at the top acc. to EN 60034-7 In the case of IP64 shaft ends, protection against the ingress of water and dust must be ensured.
Degree of protection:	IP64	Standard: without shaft seal ring, with opposing plugs fitted and fully enclosed terminal boxes
	IP65	Option: with shaft seal ring, with opposing plugs fitted and fully enclosed terminal boxes Example configuration: DSP1-071MO65W-60-54-AOA-MNP-K-AN-O-DA1
	IP65	Without consideration of shaft bushing with opposing plugs fitted and fully enclosed terminal boxes
	IP67	Without consideration of the shaft bushing for IC410 and IC 3W7, fitted with mating connectors, not for motors with terminal box
Connection	Main connection:	Refer to chapter 3.6, 3.7, Speedtec version
	Encoder connection	Speedtec rotating socket, 12-pin
	Brake	Connection in the main connection
	Fan connection	Speedtec rotating socket, 6-pin
	Temperature sensor	in the main connection by default, optionally in the encoder box
Temperature sensor	PT1000	Linear temperature sensor for the analysis in the controller
Cooling type	IC 410	Size 045-100 surface-cooled without fan
	IC 416	Size 056-100 surface-cooled with fan
	IC 3W7	Size 045-100 water-cooled machine
Temperature rise	$\Delta\vartheta$ = 105 K	Insulation class F acc. to EN 60034
Environmental conditions for running	Class 3K3/3Z12 as per DIN EN 60721-3-3: however: temperature range 0-40 °C	Represents 0 to 40 °C at 5 % to 85 % rel. humidity and an absolute humidity of 1 g/m³ to 25 g/m³ and an installation height up to approx. 1,400 m.
Environmental conditions for long-term storage	Class 1K2/1M1 DIN EN 60721-3-1: however: temperature range -15-60 °C	Represents -15 to 60 °C at 5 % to 85 % rel. humidity and an absolute humidity of 1 g/m³ to 25 g/m³; at temperatures below 3 °C you should drain the cooling water
Environmental conditions for transport	Class 2K2/2M1 DIN EN 60721-3-2: however: temperature range -15-60 °C	Represents -15 to 60 °C at 5 % to 85 % rel. humidity and an absolute humidity of 1 g/m³ to 25 g/m³; at temperatures below 3 °C you should drain the cooling water
Paint	Black matt	RAL 9005

Bearings	D end	Standard: Ball bearings. Optional: Roller bearings (for size 56-100)
	ND end	Ball bearings, rolling bearing
Bearing service life	L_{10h} 20.000h	Approximate value, rolling-contact bearings with long-term grease lubrication
Balance quality	A	Acc. to DIN EN 60034-14 (VDE 0530 Part 14): 2004-09
	B	On request (for ball bearing only)
True running	N	Standard: Normal acc. to DIN 42955
	R	Optional: Reduced acc. to DIN 42955
Vibration-proof up to	radial 3 g / axial 0,5 g**	10 Hz to 100 Hz acc. to EN 60068-2-6
Flange	as per standard IEC standard	Centralization diameter: tolerance j6
Shaft end	Cylindrical	Smooth acc. to DIN 748 (also available with key DIN 6885)
		Centralization with female thread as per DIN 332 Form D
Holding brake	Option	Zero play permanent magnet brake
Speed actual value encoder	Resolver	Standard, see Chapter 3.3
Approvals	CE; cULus; UKCA, CEL	Standard

*) DIN EN 50347:2003-09 non applicable, as valid for AC standard motors, only.

**) If vibration loads are present, then measurements are required.
Based on these constructive reviews and evaluations with the company Baumüller will be carried out.

1.2. General safety instructions

The standard versions of the motors are unsuitable for operation in salty or aggressive atmospheres and are not suitable for erection outdoors. If the air is contaminated with dust particles or similar substances in the surrounding air when using air-cooled motors, which cannot be kept out efficiently by the filter elements in use then the manufacturer must be contacted to find a solution to the problem.

Suitable steps to reduce bearing currents are to be taken before commissioning the motor, depending on the application and system. The motor manufacturer must be consulted in this regard.

Note:

With allocation of the motor in a specific protection class, it is a standardized brief test procedure. This can vary considerably depending on the actual environmental conditions at the site of installation.
Depending on the environmental conditions, such as the chemical consistency of the dust materials or the cooling media being used at the site of installation, evaluation of the suitability of the motor based on the type of protection is only possible to a limited extent (e.g., electrically conducting dust materials or aggressive coolant vapors or coolant fluids). In these cases, the motor must additionally be protected by appropriate measures on the machine side.

1.3. Definition of ratings

1.3.1. Definitions of power ratings for air-cooled machines

The power ratings (torques) listed in the table applies to continuous operation (S1) at the rated speed and a maximum ambient temperature of 40°C, for machines installed below 1,000 m a.m.s.l.
If motors are to be operated at an ambient temperature of more than 40°C, or altitudes above 1,000 m a.m.s.l., the required list power rating P_L (list torque M_r) is calculated from the product of factors k_1 and k_2 (specified in the table below) and the required power rating P (torque M).

Ambient temperature	40°C	45°C	50°C	55°C	60°C
Correction factor k_1	1	1.06	1.13	1.22	1.34
Altitude a.m.s.l. up to	1.000 m	2.000 m	3.000 m	4.000 m	5.000 m
Correction factor k_2	1	1.07	1.16	1.27	1.55

Design changes may be necessary in the case of ambient temperatures above 40°C and installation of motors in an enclosure: For this reason, it is imperative that the manufacturer is contacted.

If, in the case of an increasing site altitude above 1.000 m, the ambient temperature decreases by approx. 10°C per 1.000 m increase, no power correction is necessary (note the minimum operating temperature).

1.3.2. Definitions of power ratings for water-cooled machines

The power ratings (torques) that appear in the list apply to permanent operation S1 at nominal speed, provided the cooling circuit requirements for water-cooled motors are met!

The reduction factors included in the table below must be considered when operating DSP1 motors with higher coolant inlet temperatures:

Coolant inlet temperature	25 °C	30 °C	35 °C	40 °C	45 °C
Percentage of list performance (torque)	100 %	97 %	95 %	92 %	89 %

1.4. Water cooling

1.4.1. Coolant consistency

The coolant must satisfy the following specifications:

Conditions	Unit	Value
Maximum permitted system pressure	bar	6
Temperature of coolant - for motor	° C	10 to 25
pH value (at 20° C)	---	6.5 to 9
Overall hardness	mmol/l	1.43 to 2.5
Chloride - Cl^-	mg/l	< 200
Sulphate - SO_4^{2-}	mg/l	< 200
Oil	mg/l	< 1
Permitted particle size of solid foreign objects, particles (e.g. sand)	mm	< 0.1

Clean water that is free of dirt and suspended matter must be used as a coolant.

Note:
If the specific heat capacity is reduced by adding glycol for example, in dependence of the mixing ratio is a power reduction in the consequence, which is to be asked for at the manufacturer.

Compared to water cooling in the event of the use of hydraulic oil (HLP 46) a power rating reduction according to the overall length and speed of 20 to 25% arises for sizes 56-100 and 10% for size 132. The base is an inlet temperature of 35°C at both cooling mediums and an identical volume flow rate. The decrease of pressure is higher if using the hydraulic oil. Specific power ratings are available on request.

1.4.2. Min. coolant temperature against ambient temperature and humidity

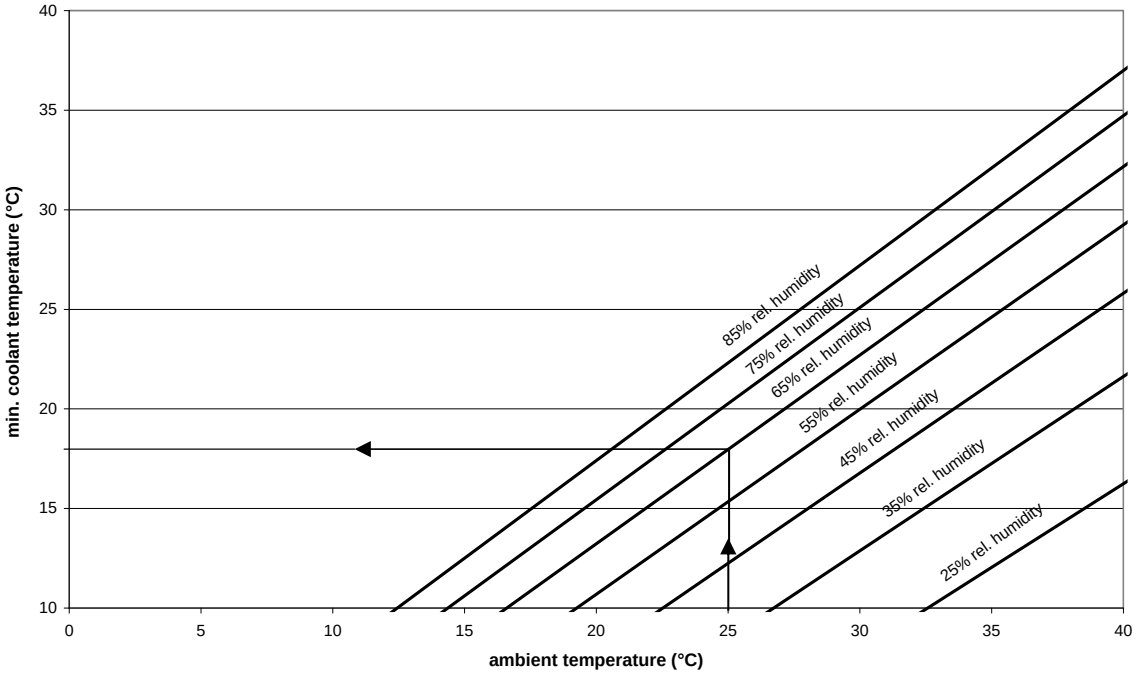

The allowed coolant temperature depends on relative humidity and ambient temperature. For example, with an ambient temperature of 25 °C and a relative humidity of 65% the minimum coolant temperature is 18 °C. Because these are limiting values on practical side a coolant temperature greater than 18 °C should be used. If this minimum coolant temperature will be under run the two- point controller of Baumüller drive must be used to avoid condensation.

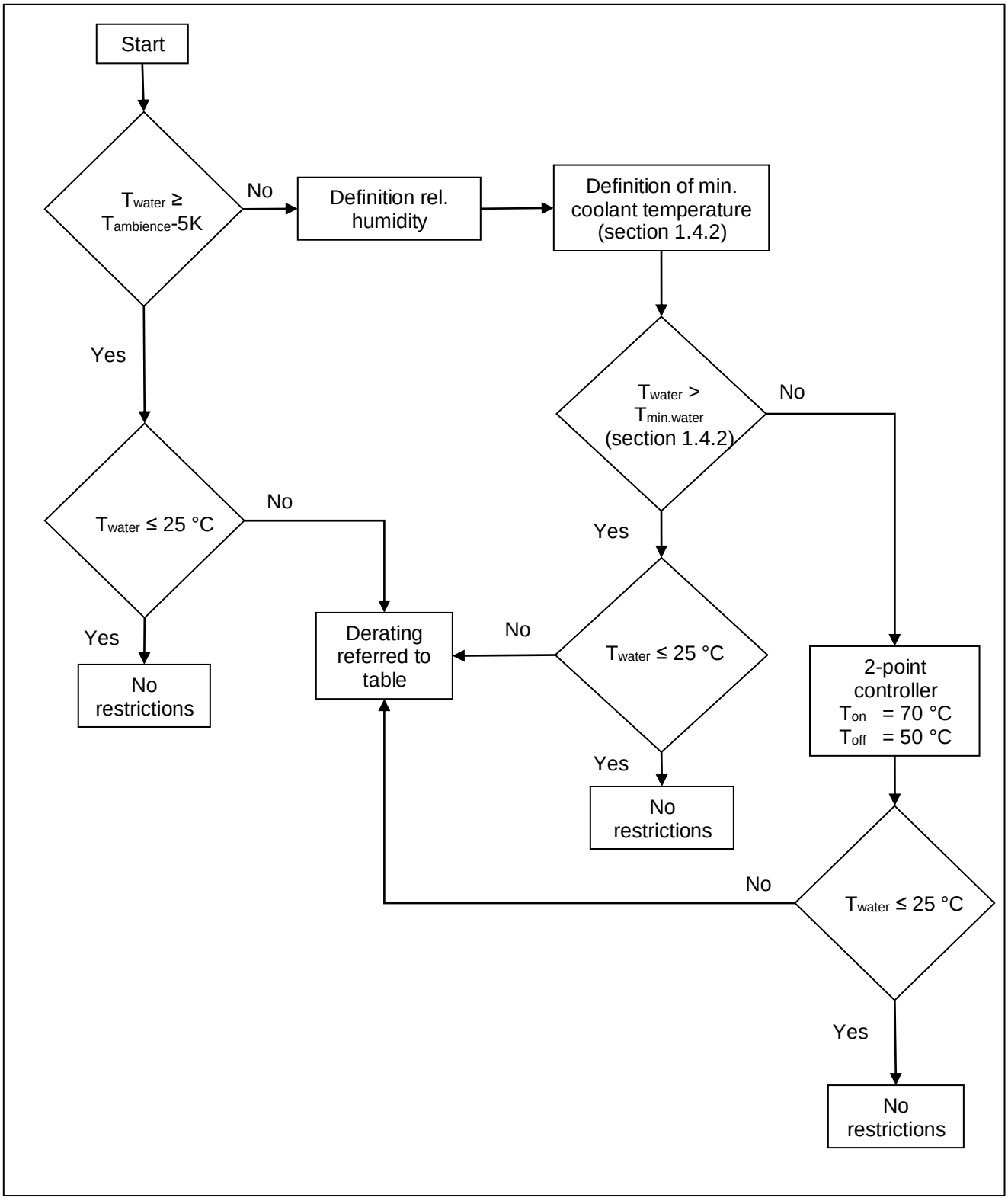

Note:
The supply of cooling fluid must be interrupted to prevent condensation when storing for an extended period. In addition, at ambient temperatures < 3°C and if the motor has not run for an extended period, drain the cooling fluid to prevent damage caused by frost. When using anti-freeze, you need to consult the manufacturer.

1.4.3. Specifications for required coolant volume flow

Motor type	Volume flow [l/min]	Pressure decrease ± 15 % [bar]	Heating [K]	Max. coolant pressure [bar]	Connection (2x) [mm]
DSP1-045KO64W	5	1,0	1	6	Quick coupling for the hose connection (Ø8
DSP1-045SO64W	5	1,1	2	6	Quick coupling for the hose connection (Ø8
DSP1-045MO64W	5	1,2	2	6	Quick coupling for the hose connection (Ø8

Motor type	Volume flow [l/min]	Pressure decrease ± 15 % [bar]	Heating [K]	Max. coolant pressure [bar]	Anschluss (2x) [mm]
DSP1-056KO64W	5	0,5	1,5	6	Quick coupling for the hose connection (Ø8
DSP1-056SO64W	5	0,5	2,5	6	Quick coupling for the hose connection (Ø8
DSP1-056MO64W	5	0,6	3	6	Quick coupling for the hose connection (Ø8

Motor type	Volume flow [l/min]	Pressure decrease ± 15 % [bar]	Heating [K]	Max. coolant pressure [bar]	Connection (2x) [mm]
DSP1-071KO64W	5	0.33	3	6	stainless steel tube Ø8x1
DSP1-071SO64W	5	0.4	5	6	stainless steel tube Ø8x1
DSP1-071MO64W	5	0.5	6	6	stainless steel tube Ø8x1

Motor type	Volume flow [l/min]	Pressure decrease ± 15 % [bar]	Heating [K]	Max. coolant pressure [bar]	Connection [mm]
DSP1-100KO64W	5	0.34	3	6	stainless steel tube Ø8x1
DSP1-100SO64W	5	0.4	5	6	stainless steel tube Ø8x1
DSP1-100MO64W	5	0.46	7	6	stainless steel tube Ø8x1
DSP1-100LO64W	5	0.52	9	6	stainless steel tube Ø8x1

Controlling the feed valve individually is possible, depending on the motor temperature measured by the temperature sensor.

Note:
The given cooling volume flows relate to the highest rotary speed of the relevant motor lengths.

It is possible to make an individual cooling unit evaluation on the basis of the motors power loss ($P_V = P_N / \eta_N – P_N$). The cooling unit should be scaled so that its cooling performance matches the motor power loss and so that 100% of the waste heat is diffused by the unit.

Enough additives for corrosion and germ protection must be mixed in. The additive type and dosage are based on recommendations from the additive manufacturer and the prevailing ambient conditions.
A lowering of the specific heating capacity leads to an output reduction in relation to the mixing ratio which should be enquired at the manufacturer.
given cooling volume flows relate to the highest rotary speed of the relevant motor lengths.

1.4.4. Materials in the motor that make contact with the product

The following materials that contact the medium are used in the motor:

Size 45 und 56:
Cooling system: Aluminum KTL coated
Connections: In general, the motors are equipped with a quick coupling for a hose connection (Ø8 mm) in brass.
Seals: FPM

Size 71 and 100:
Cooling system: stainless steel
Water connections: According to standard, the motors are supplied with a stainless-steel tube Ø8x1 mm without additional connection technology.
The water connection with the John Guest - quick connector SM 040 808 S can be optionally provided (Ø8 mm by Ø8 mm) or equipped by a compression fitting Ø8L x G1/4“. Please include this option including the order code when ordering.

1.5. Winding insulation and heating

The motors are designed for operation on converters with intermediate circuit voltages up to 640 V.

Higher intermediate link voltages of ≤ 800 V are possible, if voltage spikes on the motor terminals are limited to <1200V by suitable filters in the motor supply line.

1.6. Explanation of motor data

n_N	Rated speed [rpm]
M_0	Nominal torque [Nm] with speeds ≥ 1 [rpm] without time limit
I_0	nominal current [A] at M_0
$M_{0,max}$	Maximum static torque [Nm] with maximum current [A] and speed = 0, momentarily
$I_{0,max}$	Static current [A] at $M_{o,\ max}$; I_{0max} is the effective value
P_N	Rated output [kW] with M_N and n_N (see Performance definition)
M_N	Rated torque [Nm]
I_N	Rated effective current [A]
$k_{E\ /\ cold}$	Voltage constant (EMF) to [V per 1000 rpm]
f_N	Rated frequency [Hz]
J	Rotor inertia incl. resolver without holding brake [kgm²]
m	Motor mass [kg]

When the converter is operating, the specified rated outputs and torques at the rated speed are achieved with a clocking frequency of ≥ 4 kHz in the power divider. We recommend a cycle frequency of > 6 kHz.
All converters scheduled for use must have the option of field weakening as a mandatory requirement.

The ***sizemaXX*** drive configurator is available at *www.baumueller.de* for designing the motors and the overall drive system.

1.7. Type key

DSP1-XXXXXXXX-XX-XX-XXX-XXX-X-XX-X-XXX	**Motor type**
DSP1-**XXX**XXXXX-XX-XX-XXX-XXX-X-XX-X-XXX	**Size** 045 056 071 100
DSP1-XXX**XX**XXX-XX-XX-XXX-XXX-X-XX-X-XXX	**Length** KO SO MO LO
DSP1-XXXXX**XX**X-XX-XX-XXX-XXX-X-XX-X-XXX	**Degree of protection** 64 - Degree of protection IP64 65 - Degree of protection IP65
DSP1-XXXXXXX**X**-XX-XX-XXX-XXX-X-XX-X-XXX	**Cooling** U - without fan O - with fan, 230 VAC Connection voltage W – water cooling
DSP1-XXXXXXXX-**XX**-XX-XXX-XXX-X-XX-X-XXX	**Rated speed class** 10 - 1000 rpm 20 - 2000 rpm 30 - 3000 rpm 40 - 4000 rpm 60 - 6000 rpm
DSP1-XXXXXXXX-XX-**XX**-XXX-XXX-X-XX-X-XXX	**DC link voltage** 54 - 540 V
DSP1-XXXXXXXX-XX-XX-**X**XX-XXX-X-XX-X-XXX	**Encoder type** [1)] A – Resolver, 2-pin D - SRS50 E - SRM50 F - ECN1313 G - EQN1325 H - ECN1325 I - EQN1337 M - Resolver, 2-pin (safety) N - SRS50-S (safety) Q - SRM50-S (safety) X - EQI1331 Y - ECI1319 Z – Resolver, 8-pin 5 - ECN1325-S (safety) 6 - EQN1337-S (safety) g - EFS50 Hiperface DSL

	h - EFM50 Hiperface DSL p - ECI1319-S (Safety) q - EQI1331-S (Safety) r - EES37 Hiperface DSL s - EEM37 Hiperface DSL t - SEK37 u - SEL37
DSP1-XXXXXXXX-XX-XX-X**X**X-XXX-X-XX-X-XXX	**Brake** O - Without brake B - With PE-brake
DSP1-XXXXXXXX-XX-XX-XX**X**-XXX-X-XX-X-XXX	**Shaft options** A - smooth shaft B - with key
DSP1-XXXXXXXX-XX-XX-XXX-**X**XX-X-XX-X-XXX	**Main connection type** M – Terminal box (PT1000) Signal socket Speedtec N – Terminal box (PT1000 on encoder socket) Signal sockets Speedtec B – Connector socket Speedtec (PT1000 on main connection) D – Connector socket Speedtec (PT1000 on encoder socket)
DSP1-XXXXXXXX-XX-XX-XXX-X**X**X-X-XX-X-XXX	**Main connection outflow** L - Left with a view toward D side on the shaft end R - Right with a view toward D side on shaft end D - DE (D side) N - NDE (N side) P - Pivoted (rotating)
DSP1-XXXXXXXX-XX-XX-XXX-XX**X**-X-XX-X-XXX	**Encoder connection outlet** L - Left with a view toward D side on the shaft end R - Right with a view toward D side on shaft end D - DE (D side) N - NDE (N side) P - Pivoted (rotating)
DSP1-XXXXXXXX-XX-XX-XXX-XXX-**X**-XX-X-XXX	**Bearings** K - Ball bearing (Kugellager) D side R - Roller bearing D side
DSP1-XXXXXXXX-XX-XX-XXX-XXX-X-**X**X-X-XXX	**Vibration class** A - Vibration class A B - Vibration class B
DSP1-XXXXXXXX-XX-XX-XXX-XXX-X-X**X**-X-XXX	**True running** N - Normal R - Reduced
DSP1-XXXXXXXX-XX-XX-XXX-XXX-X-XX-**X**-XXX	**Transmission / pump mounting** O - without transm. mounting, without pump mounting A - BPE - Transmission B - BPEF - Transmission C - BPEA - Transmission D - BPN - Transmission

	E - BPNA - Transmission F - BPNF - Transmission G - BPV – Gear box H - BPVF – Gear box
DSP1-XXXXXXXX-XX-XX-XXX-XXX-X-XX-X-**XXX**	**Expanded version** 000 - No special version AJ1 - Water connection with a John-Guest-connector AP1 – Water connection with cutting ring fitting OS1 – Fan with 115 VDC supply voltage OS2 – Fan with 24 VAC supply voltage XXX - Special version (internal coding) Special coding is made alphanumeric

Example configuration: DSP1-071MO64W-60-54-AOA-MNP-K-AN-O-000

1) The electronic encoder of the DSC1 series can be used at the DSP1 with and without fan as well, if the effective capacity required in the application is below the S1-characteristic curve of the DSP1 motors and the effective speed < 3000 1/min, refer to the example highlighted in green. For water cooled DSP1 motors there are no encoder restrictions.

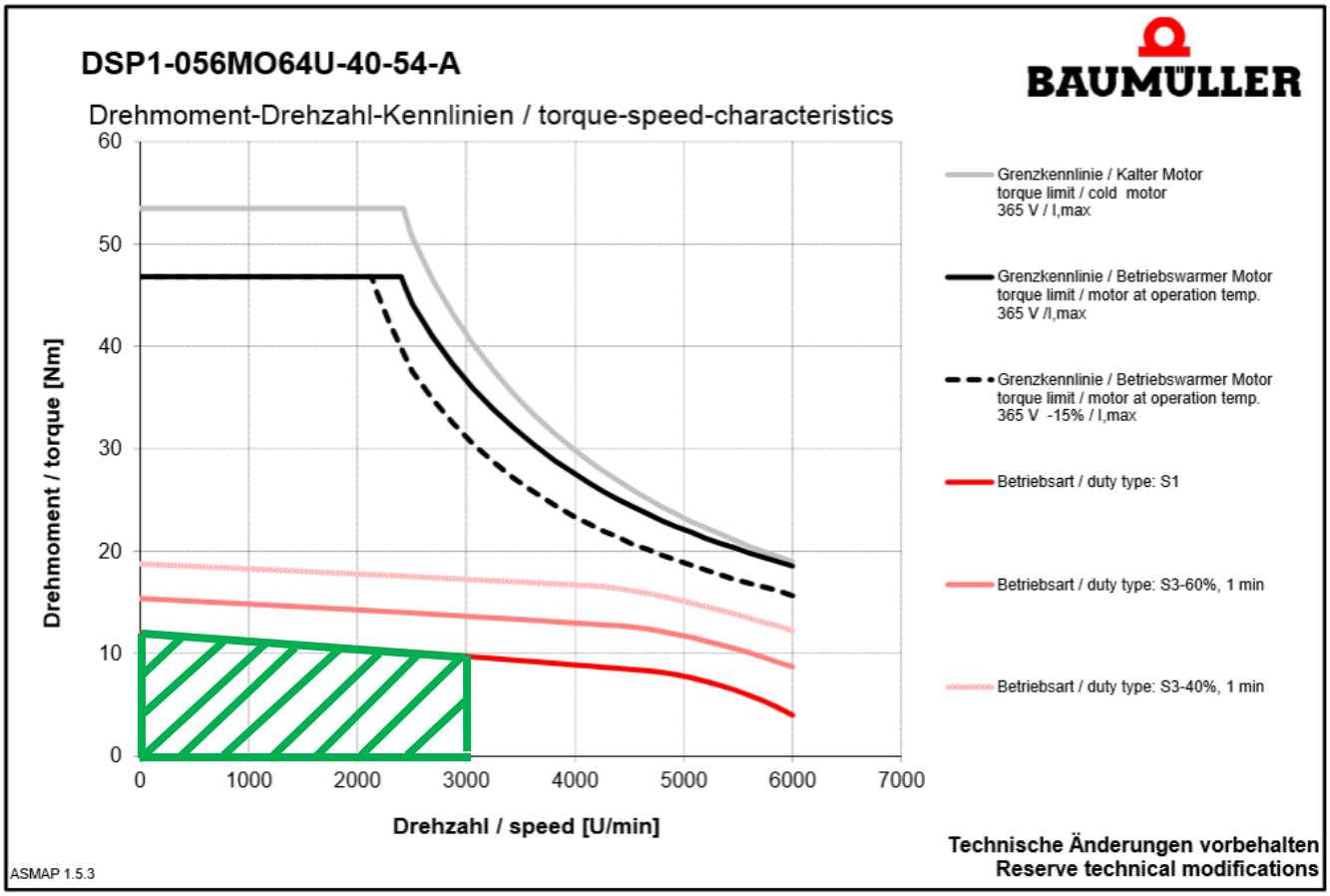

2. Technical data

2.1. DSP1-045

DSP1-045..64U-..-..-A/Z (Resolver, without fan)

3 AC 400 V mains voltage for converters with uncontrolled supply

Nom. speed	Motor type	Stand-still torque[1]	Stand-still current[1]	max. static torque	Max. static current	Rated output[1]	Rated torque[1]	Rated current[1]	Voltage constant	Rated frequency	Rotor inertia (motor)[2]	Weight[3]
n_N		M_0	I_0	$M_{0.max}$	$I_{0.max}$	P_N	M_N	I_N	$k_{E/cold}$	f_N	J	m
min^{-1}		Nm	A	Nm	A	kW	Nm	A	$V/_{1000 1/min}$	Hz	$kgcm^2$	kg
6000	DSP1-045KO64U-60-54	2.2	2.8	8.7	13.4	1.2	2	2.6	56.1	400	1.3	4
	DSP1-045SO64U-60-54	4	4.8	17	26.1	2.1	3.4	4.2	57.6	400	2.0	5.5
	DSP1-045MO64U-60-54	5.1	6.6	26	41.4	2.5	4	5.4	54.6	400	2.8	7

DSP1-045..64W-..-..-A/Z (Resolver, water-cooled)

3 AC 400 V mains voltage for converters with uncontrolled supply

Nom. speed	Motor type	Stand-still torque[1]	Stand-still current[1]	max. static torque	Max. static current	Rated output[1]	Rated torque[1]	Rated current[1]	Voltage constant	Rated frequency	Rotor inertia (motor)[2]	Weight[3]
n_N		M_0	I_0	$M_{0,max}$	$I_{0,max}$	P_N	M_N	I_N	KE/kalt	f_N	J	m
min^{-1}		Nm	A	Nm	A	kW	Nm	A	$V/_{1000\ min^{-1}}$	Hz	$kgcm^2$	kg
6000	DSP1-045KO64W-60-54	3.4	4.6	9.1	15	1.97	3.1	4.4	50.1	400	1.3	3.8
	DSP1-045SO64W-60-54	7.1	9	18.4	29.2	4.1	6.5	8.6	51.6	400	2.0	5.1
	DSP1-045MO64W-60-54	10.9	14.1	27	45.1	6.3	10	13.8	50.1	400	2.8	6.3

[1] Coil overtemperature $\Delta T < 105K$; direct flange connection (mounting plate 250 mm x 250 mm x 10 mm)
[2] rotor inertia torque with PE brake: +0,6 $kgcm^2$
[3] Weight with PE brake: +1,0 kg

2.2. DSP1-056

DSP1-056..64U-..-..-A/Z (Resolver, without fan)

3 AC 400 V mains voltage for converters with uncontrolled supply

Nom. speed	Motor type	Stand-still torque[1]	Stand-still current[1]	max. static torque	Max. static current	Rated output[1]	Rated torque[1]	Rated current[1]	Voltage constant	Rated frequency	Rotor inertia (motor)[2]	Weight[3]
n_N		M_0	I_0	$M_{0.max}$	$I_{0.max}$	P_N	M_N	I_N	$k_{E/cold}$	f_N	J	m
min^{-1}		Nm	A	Nm	A	kW	Nm	A	$V/_{1000 1/min}$	Hz	$kgcm^2$	kg
4000	DSP1-056MO64U-40-54	12	10.3	47	49.6	3.7	8.9	7.8	82.9	266.6	9.8	12
6000	DSP1-056KO64U-60-54	4.8	6.2	16	24.8	2.5	3.9	5.3	55.3	400	4	7
	DSP1-056SO64U-60-54	8.8	10.8	31	47.3	4	6.4	8	58	400	6.9	9.5
	DSP1-056MO64U-60-54	12	15.1	47	73	4.5	7.1	9.2	56.7	400	9.8	12

DSP1-056..64O-..-..-A/Z (Resolver, with fan)

3 AC 400 V mains voltage for converters with uncontrolled supply

Nom. speed	Motor type	Stand-still torque[1]	Stand-still current[1]	max. static torque	Max. static current	Rated output[1]	Rated torque[1]	Rated current[1]	Voltage constant	Rated frequency	Rotor inertia (motor)[2]	Weight[3]
n_N		M_0	I_0	$M_{0.max}$	$I_{0.max}$	P_N	M_N	I_N	$k_{E/cold}$	f_N	J	m
min^{-1}		Nm	A	Nm	A	kW	Nm	A	$V/_{1000 1/min}$	Hz	$kgcm^2$	kg
4000	DSP1-056MO64O-40-54	16	13.8	47	49.6	5.7	14	11.8	82.9	266.6	9.8	15
6000	DSP1-056KO64O-60-54	6.1	7.8	16	24.8	3.2	5.1	6.7	55.3	400	4	10
	DSP1-056SO64O-60-54	12	14	31	47.3	5.9	9.4	11.6	58	400	6.9	12.5
	DSP1-056MO64O-60-54	16	20.2	47	73	7.9	13	16	56.7	400	9.8	15

DSP1-056..64W-..-..-A/Z (Resolver, water-cooled)

Mains supply 3 AC 400 V for converter with uncontrolled supply

Nom. speed	Motor type	Stand still torque[1]	Stand-still current[1]	max. stand still torque	max. standstill current	Rated output[1]	Rated output[1]	Rated current[1]	Voltage constant	Rated frequency	Rotor inertia (motor)[2]	Weight[3]
n_N		M_0	I_0	$M_{0,max}$	$I_{0,max}$	P_N	M_N	I_N	KE/kalt	f_N	J	m
min^{-1}		Nm	A	Nm	A	kW	Nm	A	$V/_{1000\ min^{-1}}$	Hz	$kgcm^2$	kg
3700	DSP1-056MO64W-40-54	21	18.2	47	49.6	7.8	20	17.7	82.9	246.67	9.8	11.2
5500	DSP1-056KO64W-60-54	7.5	9.4	16	24.8	3.9	6.8	9.2	55.3	366.67	4	6.3
5400	DSP1-056SO64W-60-54	14.1	17.7	31	47.3	7.6	13.5	17	58	360	6.9	8.8
5650	DSP1-056MO64W-60-54	21	26.6	47	73	12	19.8	25.3	56.7	376.67	9.8	11.2

[1] Coil overtemperature $\Delta T < 105K$; direct flange mounting (mounting plate 450 x 400 x 30 mm)
[2] Rotor inertia torque with PE brake: +2.9 $kgcm^2$
[3] Weight with PE brake: +2.0 kg

2.3. DSP1-071

DSP1-071..64U-..-..-A/Z (Resolver. without fan)

3 AC 400 V mains voltage for converters with uncontrolled supply

Nom. speed	Motor type	Stand-still torque[1]	Stand-still current[1]	max. static torque	Max. static current	Rated output[1]	Rated torque[1]	Rated current[1]	Voltage constant	Rated frequency	Rotor inertia (motor)[2]	Weight[3]
n_N		M_0	I_0	$M_{0.max}$	$I_{0.max}$	P_N	M_N	I_N	$k_{E/cold}$	f_N	J	m
min^{-1}		Nm	A	Nm	A	kW	Nm	A	$V/_{10001/min}$	Hz	$kgcm^2$	kg
4000	DSP1-071MO64U-40-54	24	22.9	79	94	5.9	14	13.8	73.3	266.6	27.8	18.8
6000	DSP1-071KO64U-60-54	8.7	12.5	26	45.7	4.4	7	10.3	50.2	400	12	9.6
	DSP1-071SO64U-60-54	17	23.6	53	91	6.2	9.8	14.4	50.2	400	20	14.2
	DSP1-071MO64U-60-54	24	33.9	79	139	5.1	8.2	12.4	49.6	400	27.8	18.8

DSP1-071..64O-..-..-A/Z (Resolver. with fan)

3 AC 400 V mains voltage for converters with uncontrolled supply

Nom. speed	Motor type	Stand-still torque[1]	Stand-still current[1]	max. static torque	Max. static current	Rated output[1]	Rated torque[1]	Rated current[1]	Voltage constant	Rated frequency	Rotor inertia (motor)[2]	Weight[3]
n_N		M_0	I_0	$M_{0.max}$	$I_{0.max}$	P_N	M_N	I_N	$k_{E/cold}$	f_N	J	m
min^{-1}		Nm	A	Nm	A	kW	Nm	A	$V/_{10001/min}$	Hz	$kgcm^2$	kg
4000	DSP1-071MO64O-40-54	31	30.4	80	94	11	25	24.8	73.3	266.6	27.8	21.9
6000	DSP1-071KO64O-60-54	11	16.2	27	45.7	5.4	8.6	12.5	50.2	400	12	12.7
	DSP1-071SO64O-60-54	21	30.7	53	91	10	16	23.3	50.2	400	20	17.3
	DSP1-071MO64O-60-54	31	44.9	79	139	14	23	32.8	49.6	400	27.8	21.9

DSP1-071..64W-..-..-A/Z (Resolver. water cooled)

3 AC 400 V mains voltage for converters with uncontrolled supply

Nom. speed	Motor type	Stand-still torque[1]	Stand-still current[1]	Max. static torque	Max. static current	Rated output[1]	Rated torque[1]	Rated current[1]	Voltage constant	Rated frequency	Rotor inertia (motor)[2]	Weight[3]
n_N		M_0	I_0	$M_{0.max}$	$I_{0.max}$	P_N	M_N	I_N	$k_{E/cold}$	f_N	J	m
min^{-1}		Nm	A	Nm	A	kW	Nm	A	$V/_{10001/min}$	Hz	$kgcm^2$	kg
4000	DSP1-071MO64W-40-54	48	48.5	79	94	19	45	45.1	71.9	266.6	27.8	20.4
6000	DSP1-071KO64W-60-54	15	21.2	27	45.7	8.3	13	19.2	49.2	400	12	11.7
	DSP1-071SO64W-60-54	31	44.7	53	91	17	28	40.4	49.2	400	20	16.1
	DSP1-071MO64W-60-54	48	72	79	139	27	43	64	48.6	400	27.8	20.4

[1] Coil overtemperature $\Delta T < 105K$; direct flange mounting (mounting plate 450 x 400 x 30 mm)
[2] Rotor inertia moment with PE brake: +7.9 $kgcm^2$
[3] Weight with PE brake: +3.0 kg

2.4. DSP1-100

DSP1-100..64U-..-..-A/Z (Resolver. without fan)

3 AC 400 V mains voltage for converters with uncontrolled supply

Nom. speed	Motor type	Stand-still torque[1]	Stand-still current[1]	Max. static torque	Max. static current	Rated output[1]	Rated torque[1]	Rated current[1]	Voltage constant	Rated frequency	Rotor inertia (motor)[2]	Weight[3]
n_N		M_0	I_0	$M_{0.max}$	$I_{0.max}$	P_N	M_N	I_N	$k_{E/cold}$	f_N	J	m
min^{-1}		Nm	A	Nm	A	kW	Nm	A	$V/_{10001/min}$	Hz	$kgcm^2$	kg
1000	DSP1-100LO64U-10-54	56	16.6	150	55	5.2	50	14.8	245	66.7	108	40.2
2000	DSP1-100LO64U-20-54	56	32.1	150	106	9.1	44	25	127	133.3	108	40.2
3000	DSP1-100MO64U-30-54	45	36.3	115	112	9.5	30	24.3	90	200	84	33
	DSP1-100LO64U-30-54	56	42.9	150	142	12	37	28.6	94.6	200	108	40.2
4000	DSP1-100KO64U-40-54	18	20.1	39	53	4.9	12	13.4	63.4	266.7	35.6	18.5
	DSP1-100SO64U-40-54	33	35	77	99	8.6	21	21.9	67.6	266.7	60	25.7
	DSP1-100MO64U-40-54	45	46	115	142	11	26	26.4	71	266.7	84	33
	DSP1-100LO64U-40-54	56	50	150	165	13	30	27.6	81.1	266.7	108	40.2
6000	DSP1-100KO64U-60-54	18	28.7	39	76	5.2	8.2	13.6	44.4	400	35.6	18.5
	DSP1-100SO64U-60-54	33	46.7	77	132	9	14	20.8	50.7	400	60	25.7
	DSP1-100MO64U-60-54	45	54	115	165	11	18	22	60.8	400	84	33

DSP1-100..64O-..-..-A/Z (Resolver. with fan)

3 AC 400 V mains voltage for converters with uncontrolled supply

Nom. speed	Motor type	Stand-still torque[1]	Stand-still current[1]	Max. static torque	Max. static current	Rated output[1]	Rated torque[1]	Rated current[1]	Voltage constant	Rated frequency	Rotor inertia (motor)[2]	Weight[3]
n_N		M_0	I_0	$M_{0.max}$	$I_{0.max}$	P_N	M_N	I_N	$k_{E/cold}$	f_N	J	m
min^{-1}		Nm	A	Nm	A	kW	Nm	A	$V/_{10001/min}$	Hz	$kgcm^2$	kg
1000	DSP1-100LO64O-10-54	74	22.2	155	55	7.2	69	20.7	245	66.7	108	47
2000	DSP1-100LO64O-20-54	74	42.9	155	106	13	64	36.9	127	133.3	108	47
3000	DSP1-100MO64O-30-54	55	44.9	115	112	14	46	37.2	90	200	84	36.9
	DSP1-100LO64O-30-54	74	57	150	142	18	58	45.1	94.6	200	108	47
4000	DSP1-100KO64O-40-54	22	25.4	39	53	7.1	17	19.7	63.4	266.7	35.6	22.4
	DSP1-100SO64O-40-54	39	42.1	77	99	13	31	33.3	67.6	266.7	60	29.6
	DSP1-100MO64O-40-54	55	51	115	128	18	42	39.5	78.6	266.7	84	36.9
	DSP1-100LO64O-40-54	74	67	150	165	22	52	47.3	81.1	266.7	108	47
6000	DSP1-100KO64O-60-54	22	36.3	39	76	9.2	15	24.6	44.4	400	35.6	22.4
	DSP1-100SO64O-60-54	39	56	77	132	17	27	38.6	50.7	400	60	29.6
	DSP1-100MO64O-60-54	55	66	115	165	22	36	42.8	60.8	400	84	36.9

[1] Coil overtemperature $\Delta T < 105K$; direct flange mounting (mounting plate 450 x 400 x 30 mm)
[2] Rotor inertia moment with PE brake: +17.6 $kgcm^2$
[3] Weight with PE brake: +6.0 kg

DSP1-100..64W-..-..-A/Z (Resolver. water cooled)

3 AC 400 V mains voltage for converters with uncontrolled supply

Nom. speed	Motor type	Stand-still torque[1]	Stand-still current[1]	Max. static torque	Max. static current	Rated out-put[1]	Rated torque[1]	Rated current[1]	Voltage constant	Rated frequency	Rotor inertia (motor)[2]	Weight[3]
n_N		M_0	I_0	$M_{0.max}$	$I_{0.max}$	P_N	M_N	I_N	$k_{E/cold}$	f_N	J	m
min^{-1}		Nm	A	Nm	A	kW	Nm	A	$V/_{10001/min}$	Hz	$kgcm^2$	kg
1000	DSP1-100LO64W-10-54	115	36.6	150	55	12	110	35.7	245	66.7	108	45.2
2000	DSP1-100LO64W-20-54	115	71	150	106	22	105	67	127	133.3	108	45.2
3000	DSP1-100MO64W-30-54	84	74	115	112	24	75	66	90	200	84	37.2
	DSP1-100LO64W-30-54	115	95	150	142	32	100	86	94.6	200	108	45.2
4000	DSP1-100KO64W-40-54	27	32.2	39	53	11	25	30.3	63.4	266.7	35.6	21.2
	DSP1-100SO64W-40-54	55	63	77	99	21	50	56	67.6	266.7	60	29.2
	DSP1-100MO64W-40-54	84	94	115	142	30	72	80	71	266.7	84	37.2
6000	DSP1-100KO64W-60-54	27	46	39	76	15	25	41.8	44.4	400	35.6	21.2
	DSP1-100SO64W-60-54	55	84	77	132	29	46	70	50.7	400	60	29.2

[1] Coil overtemperature $\Delta T < 105K$; direct flange mounting (mounting plate 450 x 400 x 30 mm)
[2] Rotor inertia moment with PE brake: +17.6 $kgcm^2$
[3] Weight with PE brake: +6.0 kg

2.5. Vibratory load

The vibration response of the total system at the operation site. due to output elements. mounting circumstances. alignment and installation as well as by influences of external vibrations. can lead to an increase of the vibration values at the motor.
Perhaps a complete balancing of the rotor with the output element is required.
To achieve a proper functioning and service life. the specified vibration values compliant to DIN ISO 10816 may not be increased at the specified measuring points of the motor (refer to figure below).

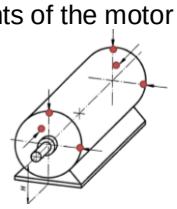

Measuring points for the vibration measuring

The specified radial and axial vibration values must be complied with. as well They are valid for substructures that are to be designated as flexible A flexible substructure is. if the lowest proper frequency of the total system in measuring direction is at least 25% under the basic excitation frequency of the total system (machine and base). All of the other substructures are to be designated solid. At solid substructures the manufacturer must be contacted.

Maximum radial vibration load:
Peak vibration acceleration 1 g > 250 Hz
Peak vibration displacement ≤ 0.16 mm < 6.3 Hz
Effect. vibration speed ≤ 4.5 mm/s
6.3 Hz – 250 Hz

Maximum axial vibration load:
Peak vibration acceleration 0.225 g > 55 Hz
Peak vibration displacement ≤ 0.16 mm < 6.3 Hz
Effect. vibration speed ≤ 4.5 mm/s
6.3 Hz – 55 Hz

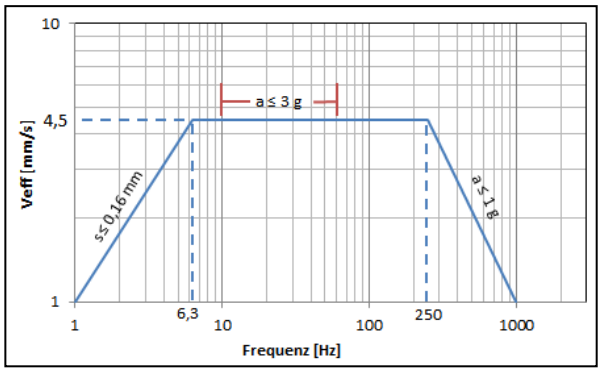

Zulässige radiale Schwingbelastung

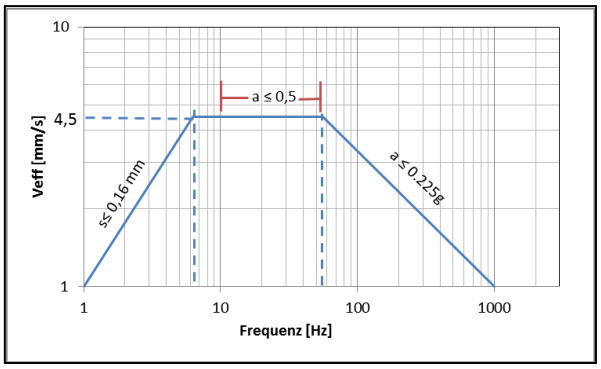

Zulässige axiale Schwingbelastung

Additional resistance to vibration:
Vibration acceleration 3 g radial and 0.5g axial 10 Hz to 55 Hz
The motor additionally withstands the specified vibrations. However. the lifetime of the parts subject to wear (for example the storage) can be reduced.

Shock load:
If the vibration loads in the form of shocks are present then measuring at the installed machine is required.
On the base of this. constructive reviews and evaluation with the company Baumüller are required.

In order to evaluate the vibration speed the measuring equipment must meet the requirements of the ISO 2954.
The evaluation of the vibration acceleration is executed in the time range within the frequency range between 10 Hz and 2 kHz.
Provided that considerable vibratory excitations over 2kHz such as meshing frequencies are to be expected. the measuring range must be correspondingly adjusted. The permitted maximum values thereby do not change.

2.6. Radial force diagrams

All bearings are designed for a service life of 20.000 h L_{10h}. The load values specified below may thereby not be exceeded. The permissible radial forces F_R are valid only for the horizontal installation of the motor without additional axial forces.
Furthermore. the specified average speeds must be adhered to reach the grease consumption period of 20.000 h under the following conditions:

- low-vibration applications
- horizontal installation
- oscillatory bearing motion in which at least one pivot angle of 180° is performed
- Continuous bearing temperatures <120° C.

Axial loading on the motor shaft is generally not permitted.
No axial forces may develop when mounting clutches. pulleys. etc. on the motor shaft!

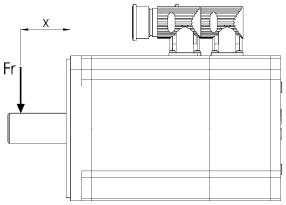

2.6.1. Sample diagram

Sample diagrams:
Driving forces x = 30 mm from the shaft shoulder
Bearing service life 20.000 h. shaft with parallel key groove

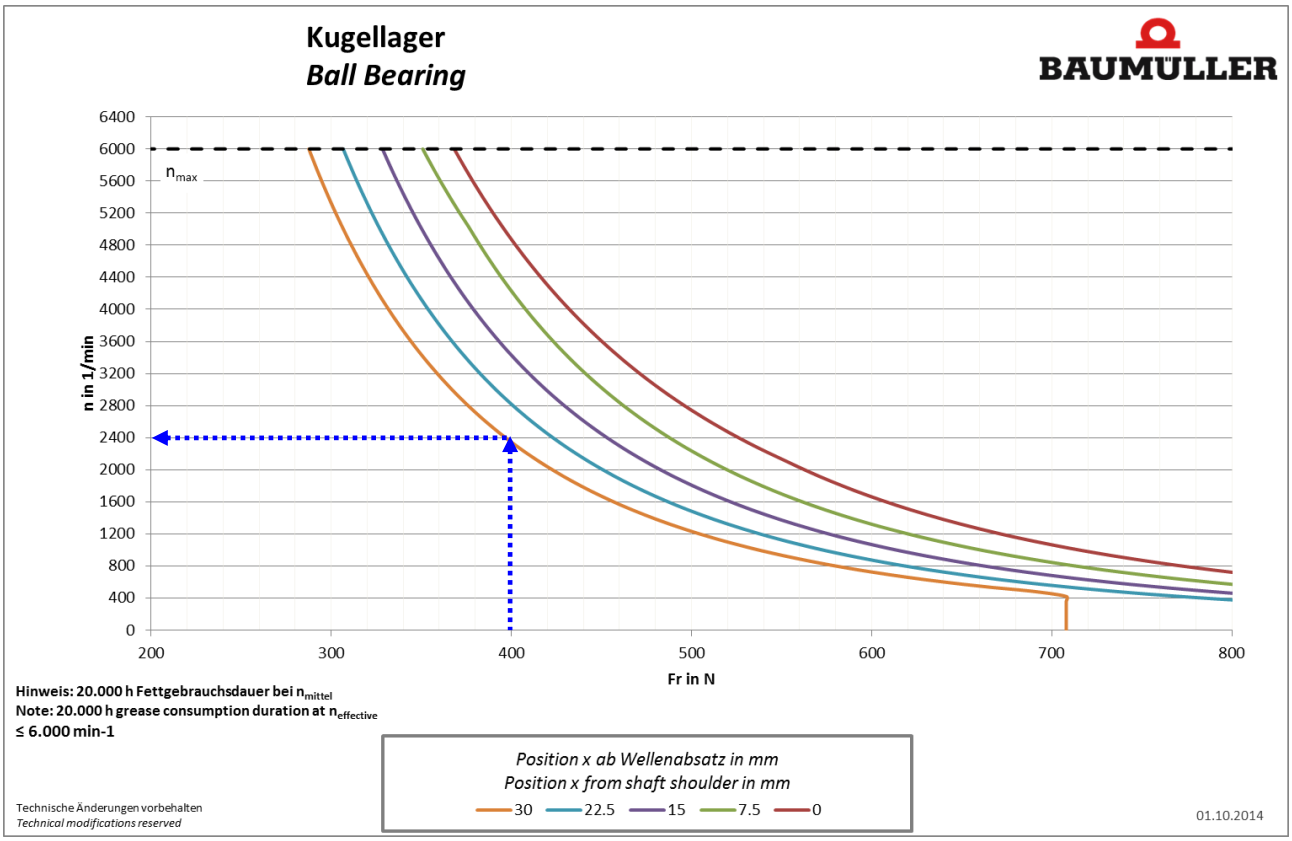

Explanation of the sample chart:

The potential maximum speed of the bearing can be calculated via radial force Fr of the application in characteristic "ball bearing".
At a radial force of 400 N with a driving force point of x = 30 mm from the shaft shoulder. a maximum speed of 2400 rpm results.

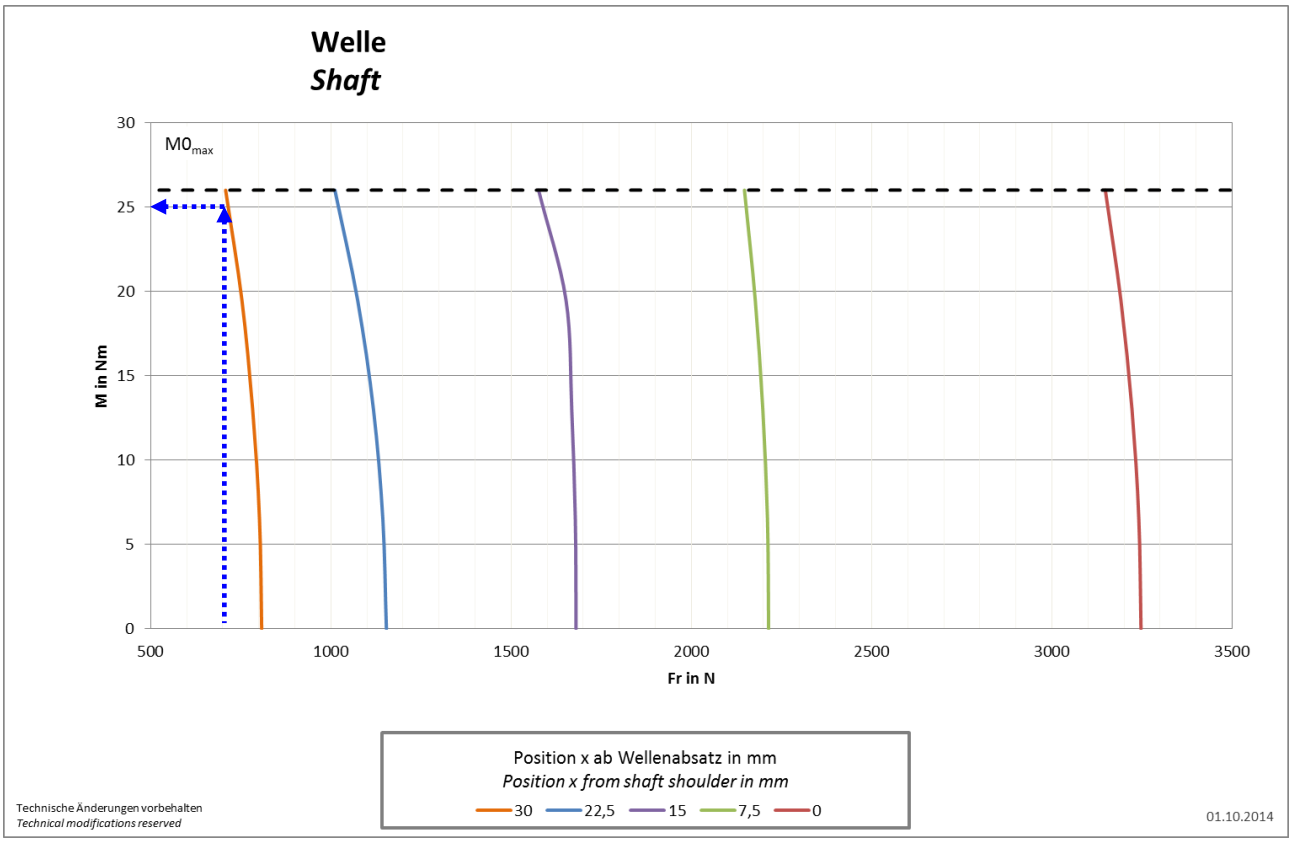

Explanation of the sample chart:

The maximum torque to be still transmitted results from the characteristic "shaft".
At a centrifugal force of 700 N with a driving force point of x = 30 mm from the shaft shoulder. a torque to be still transmitted of 25Nm results.

2.6.2. Diagram DSP1-045

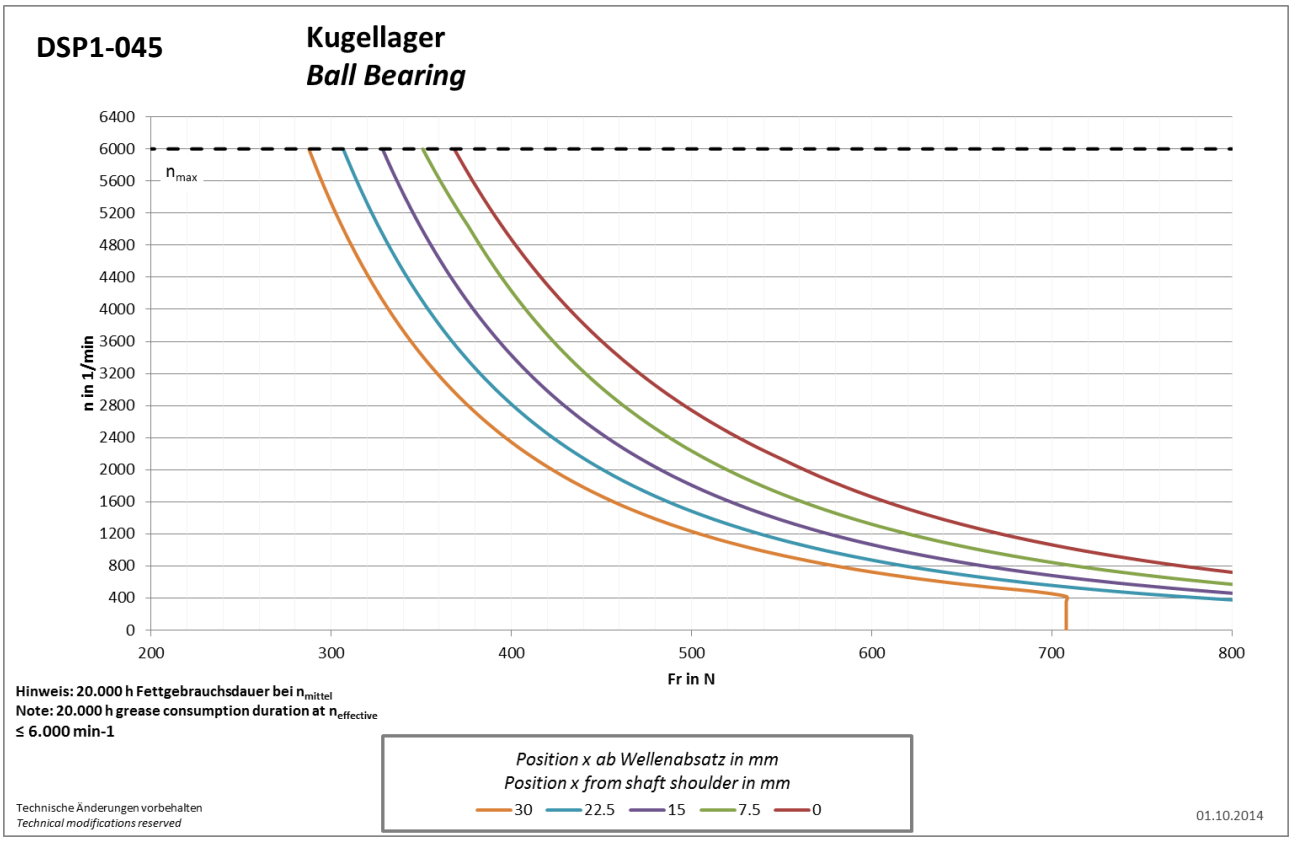

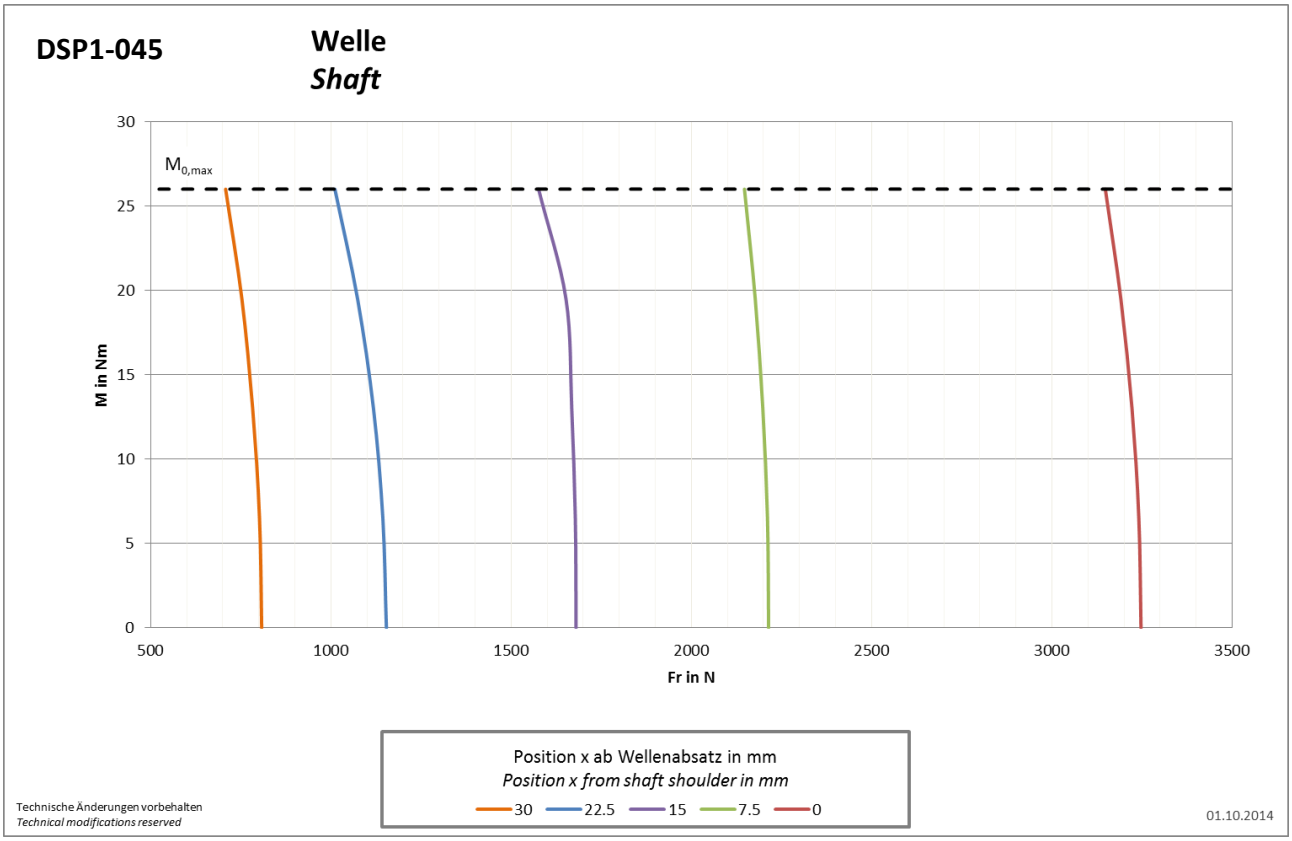

2.6.3. Diagram DSP1-056

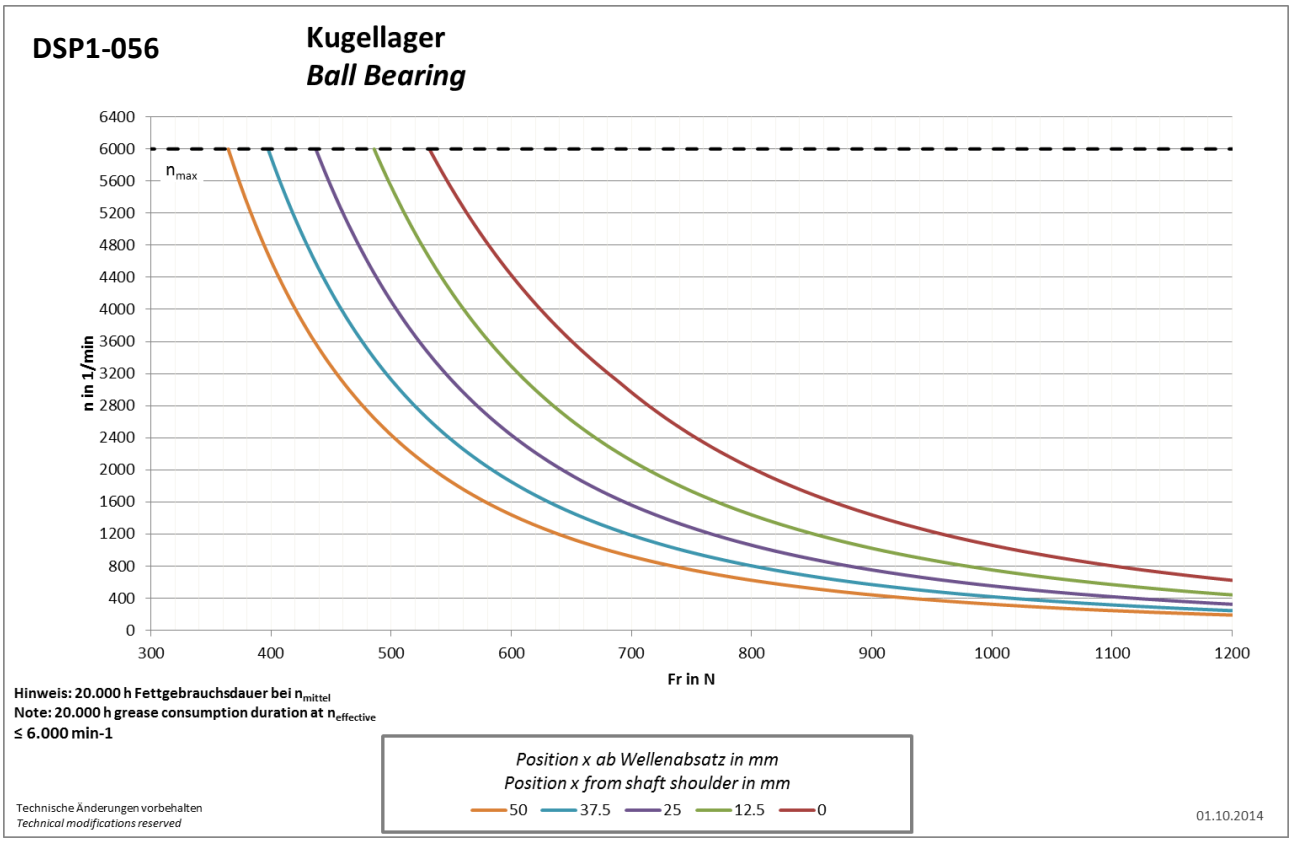

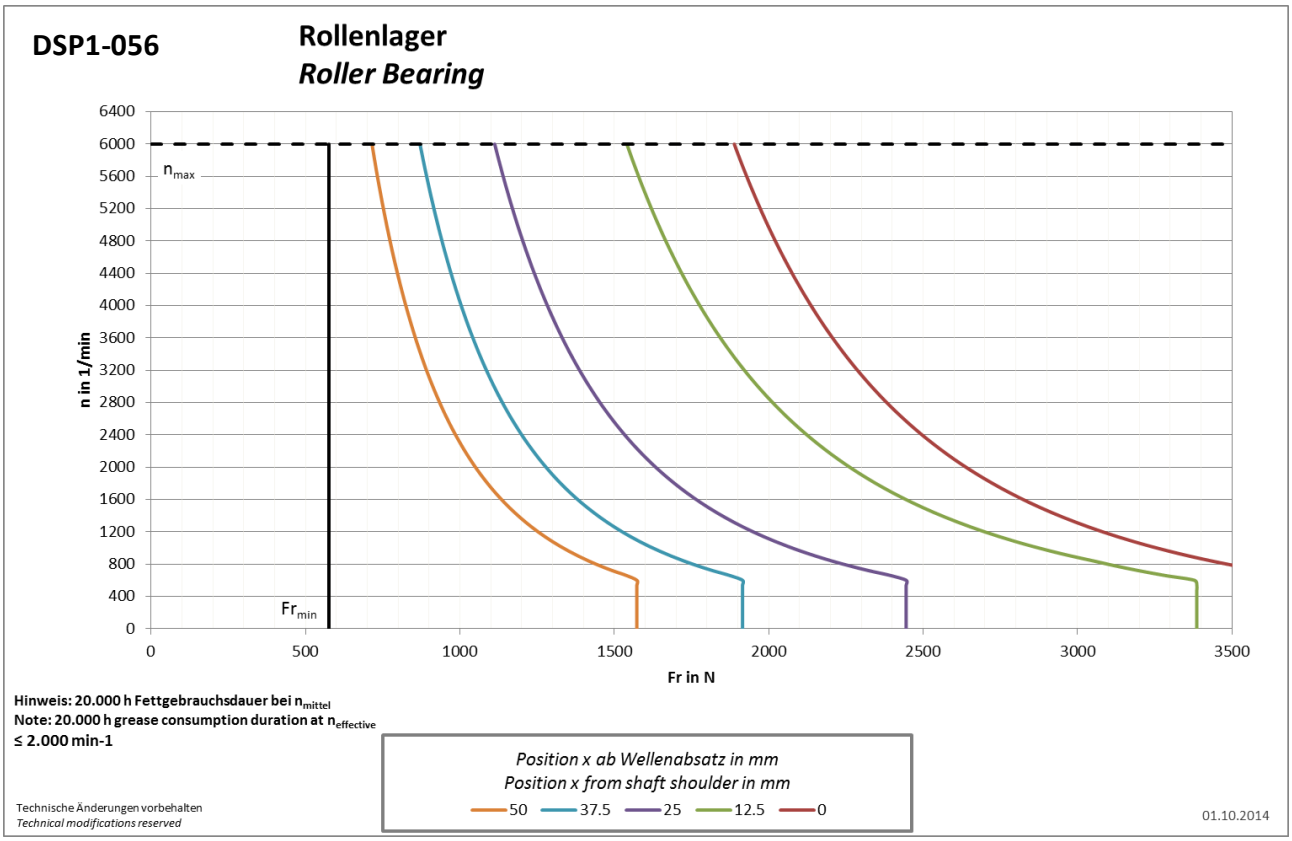

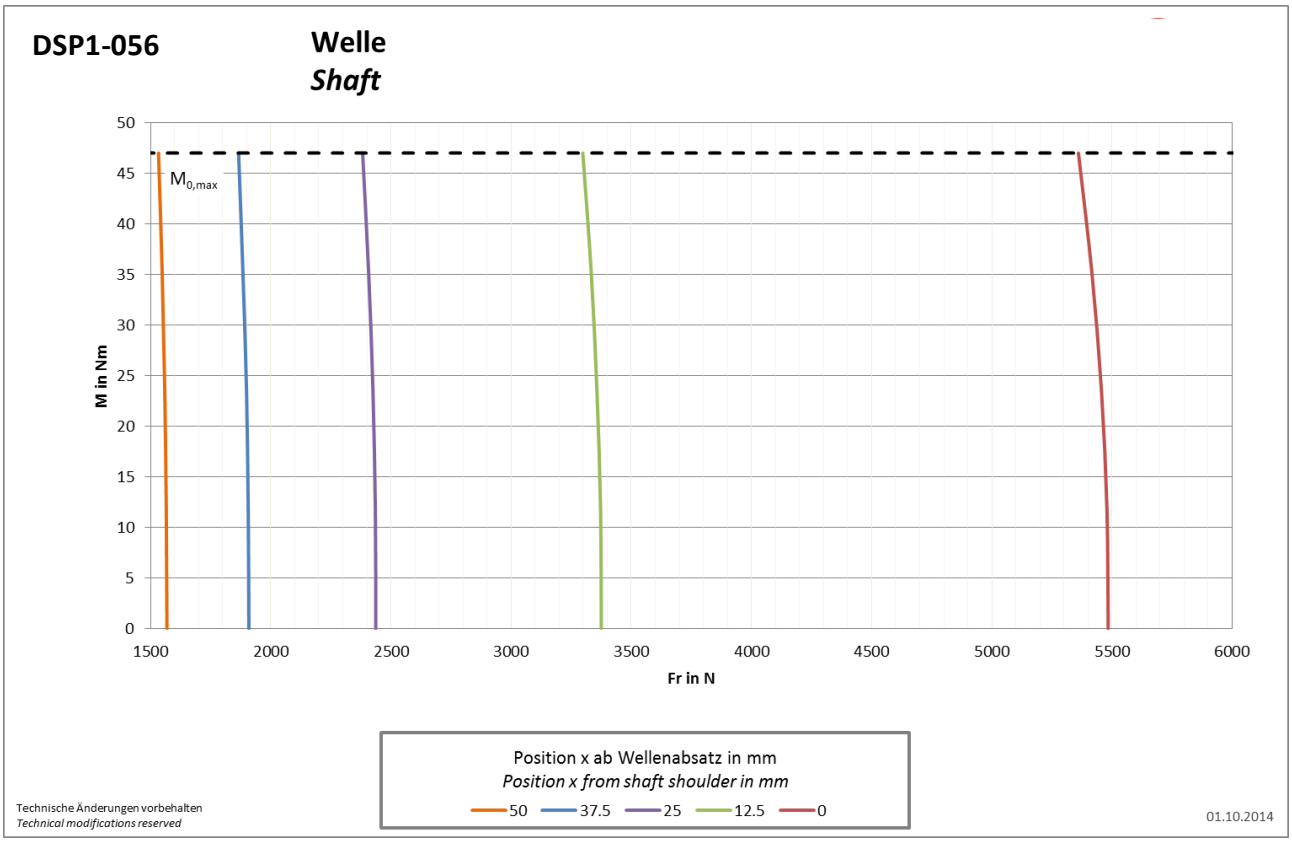
DSP1-056
Welle
Shaft
M0,max
M in Nm
Fr in N
50
45
40
35
30
25
20
15
10
5
0
1500
2000
2500
3000
3500
4000
4500
5000
5500
6000
Position x ab Wellenabsatz in mm
Position x from shaft shoulder in mm
50
37.5
25
12.5
0
Technische Änderungen vorbehalten
Technical modifications reserved
01.10.2014

2.6.4. Diagram DSP1-071

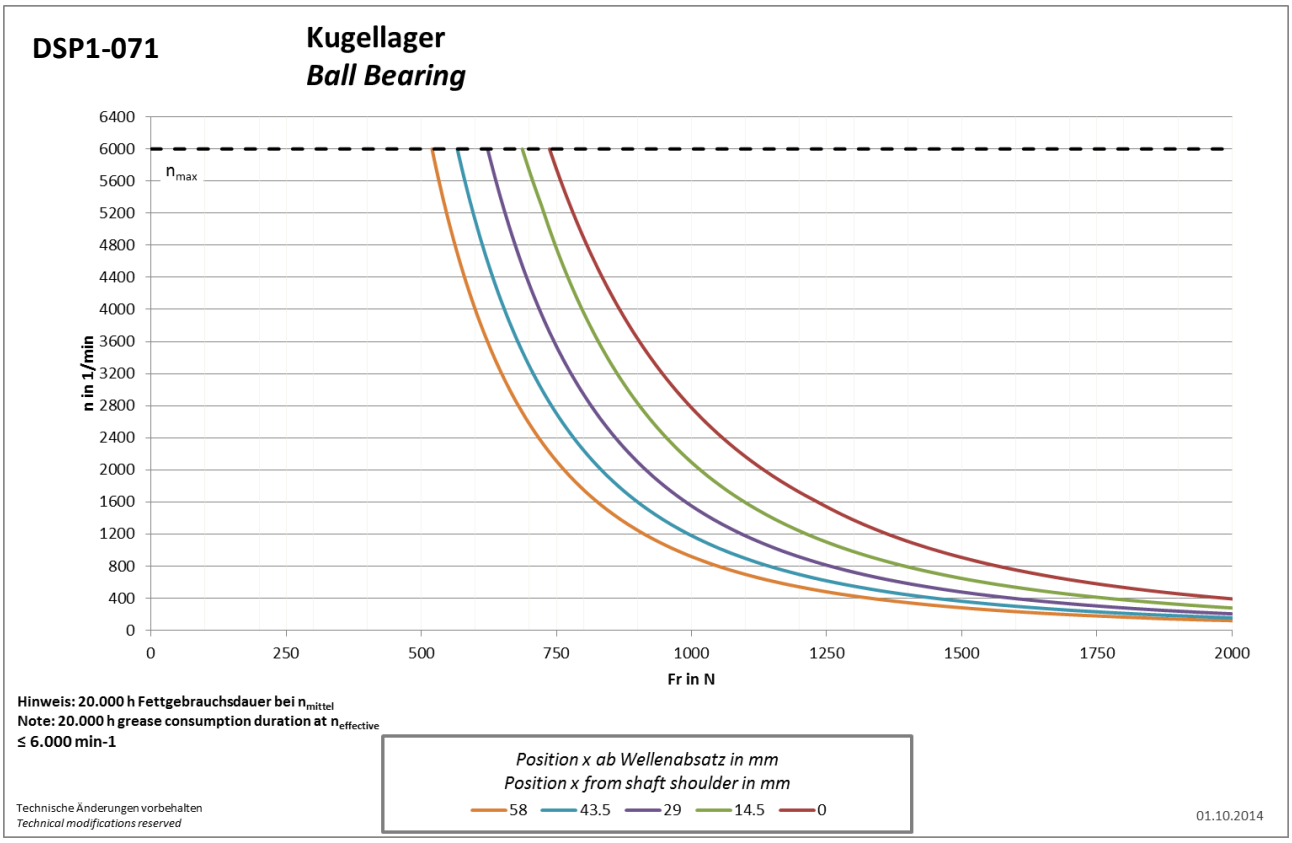

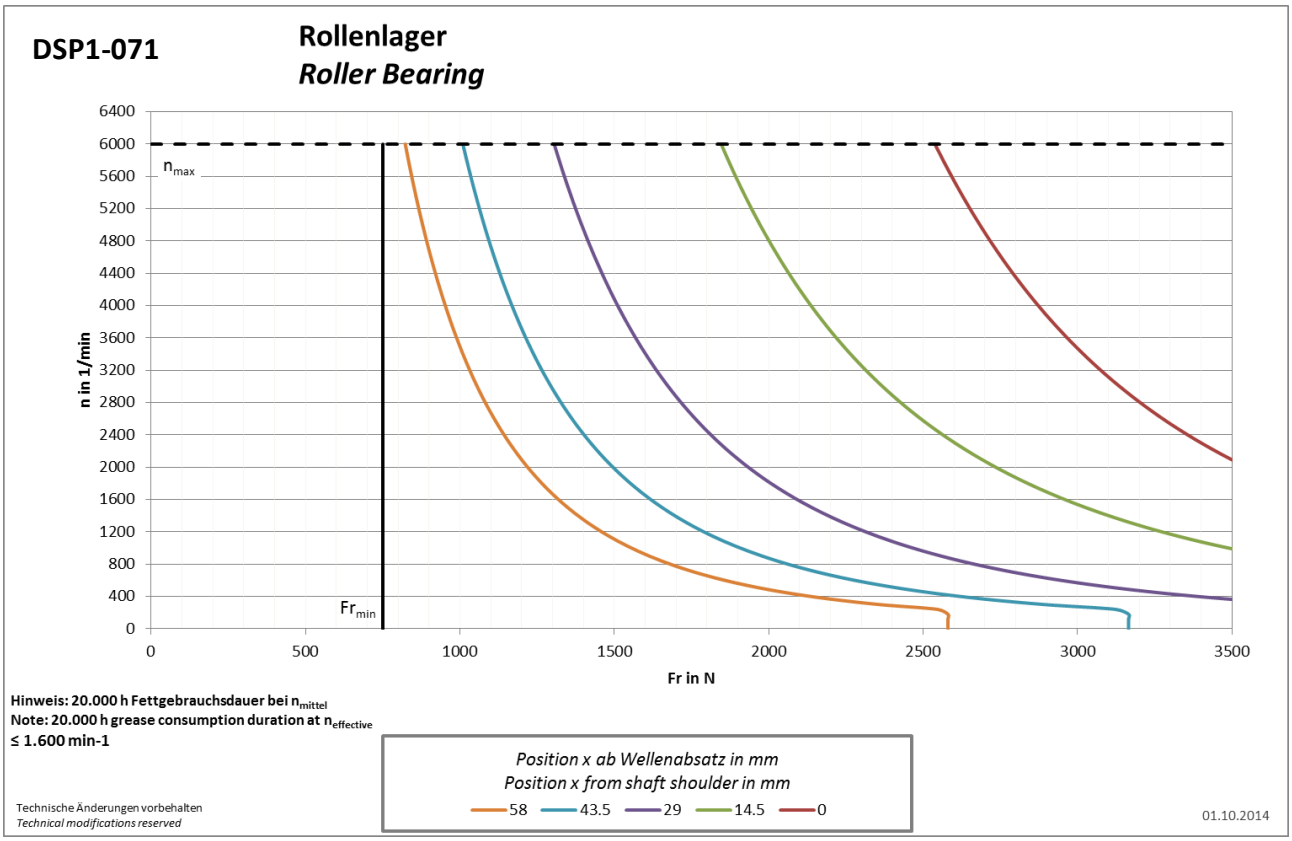

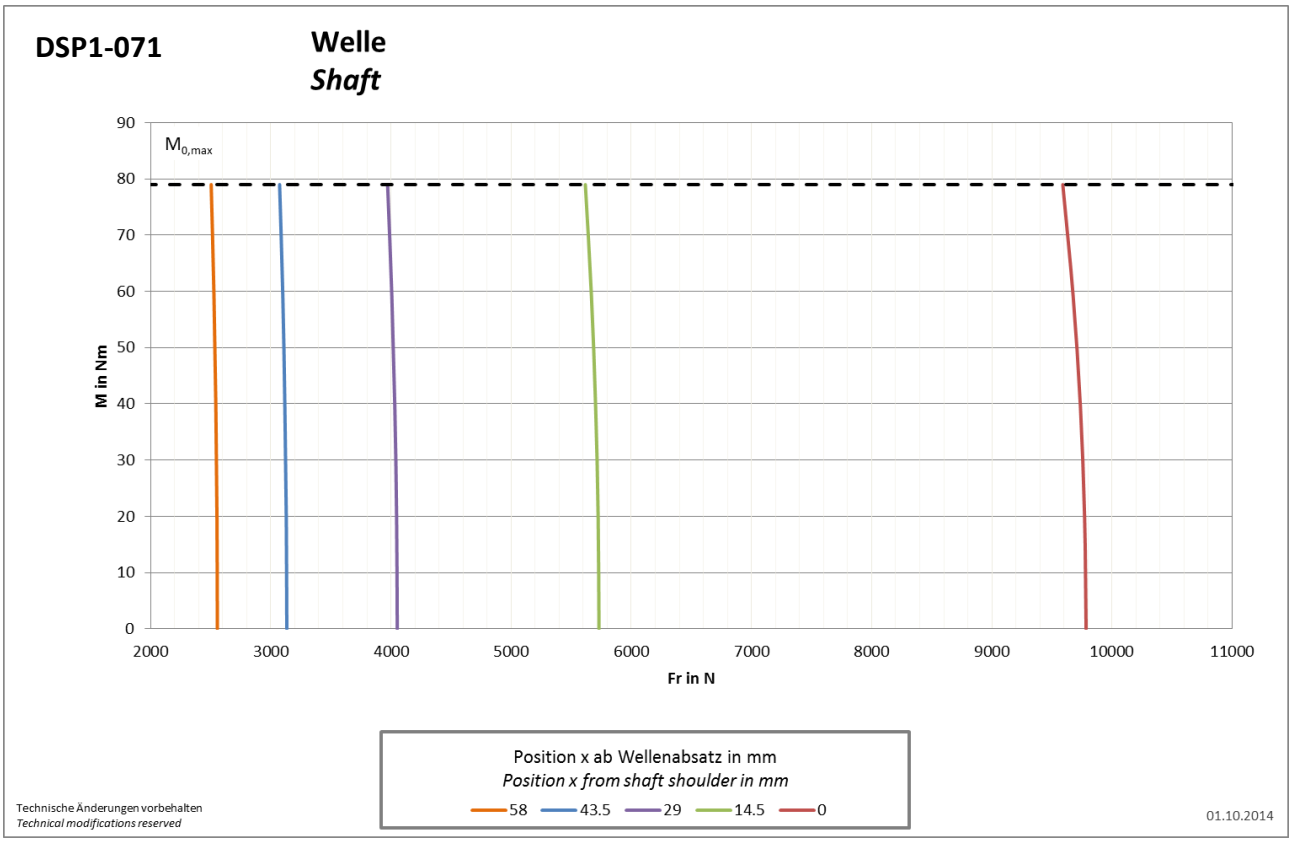
DSP1-071
Welle
Shaft
$M_{0,max}$
M in Nm
Fr in N
90
80
70
60
50
40
30
20
10
0
2000
3000
4000
5000
6000
7000
8000
9000
10000
11000
Position x ab Wellenabsatz in mm
Position x from shaft shoulder in mm
58
43.5
29
14.5
0
Technische Änderungen vorbehalten
Technical modifications reserved
01.10.2014

2.6.5. Diagram DSP1-100

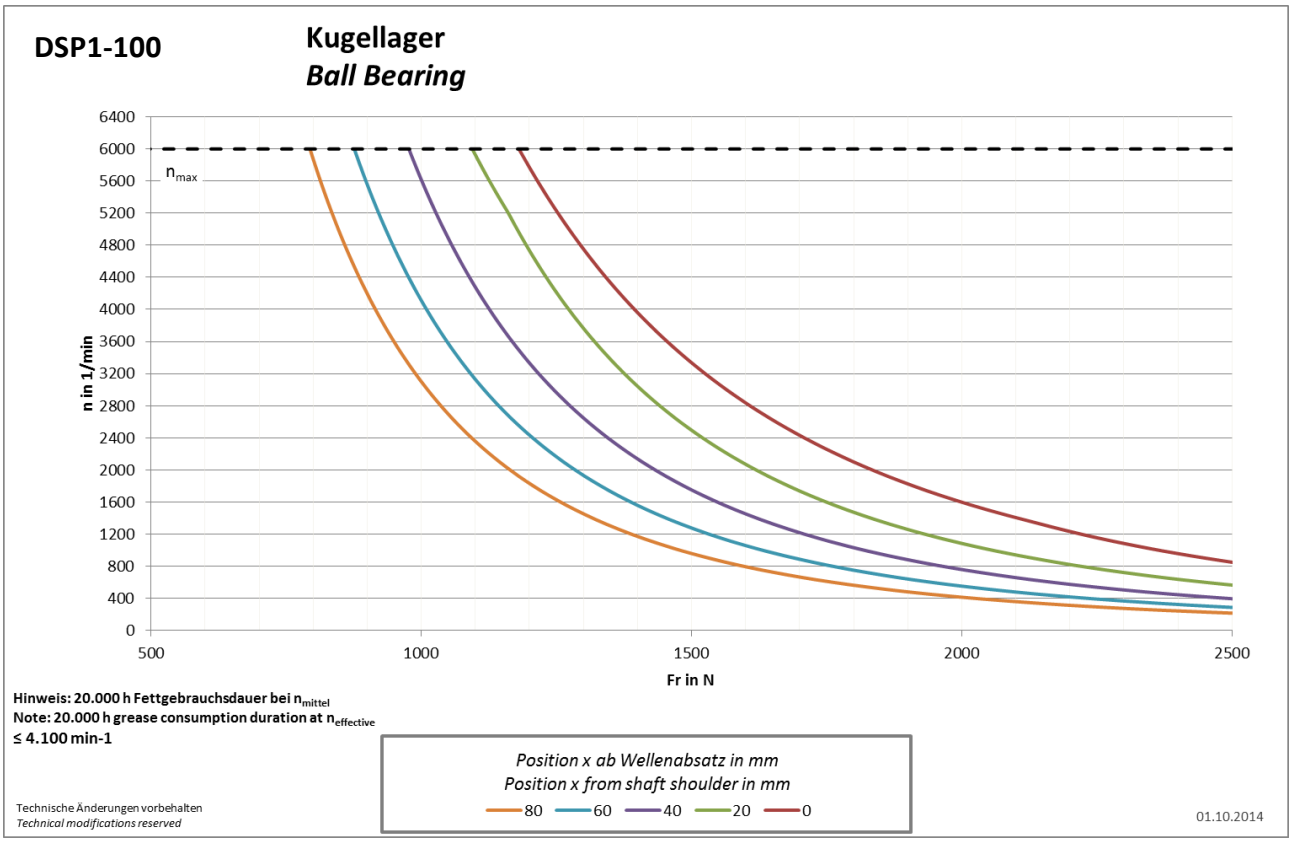

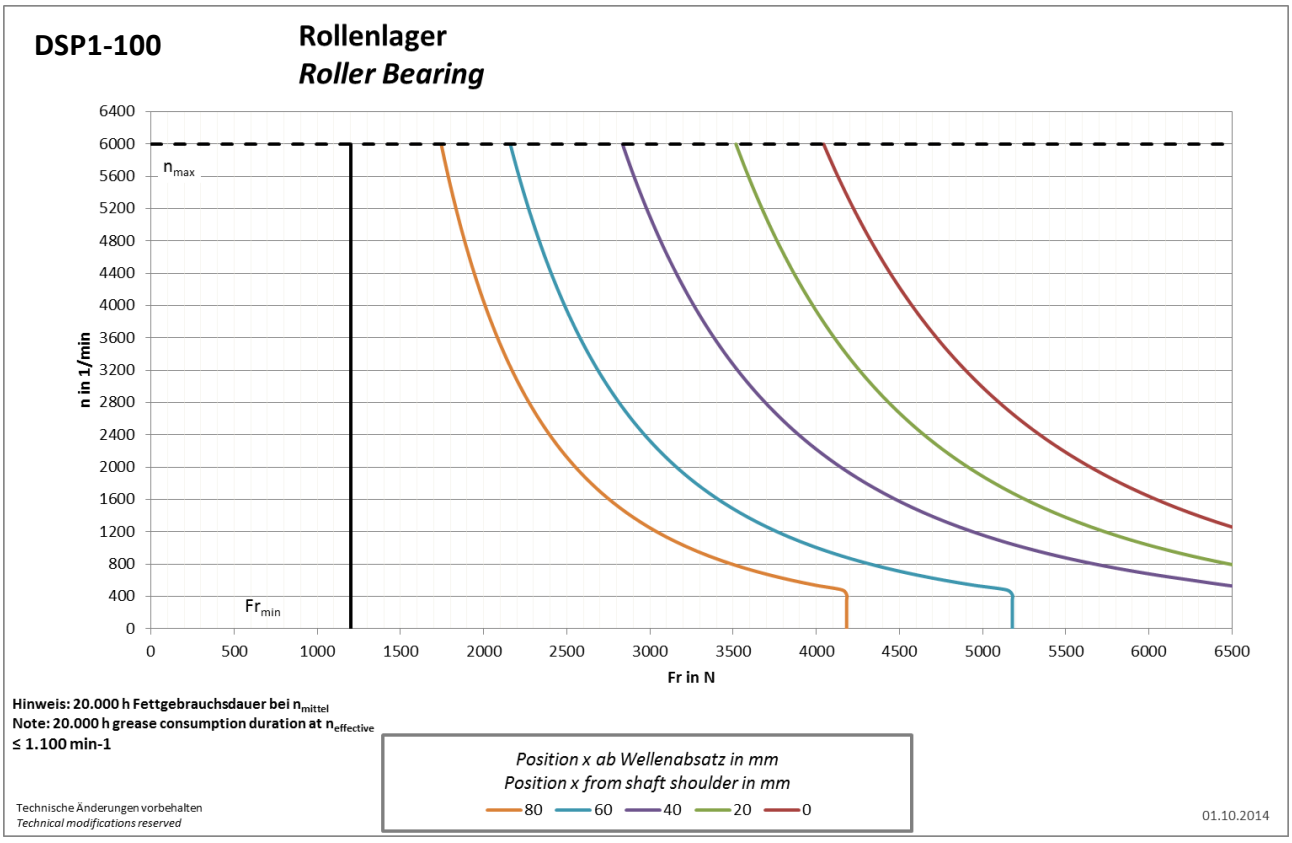

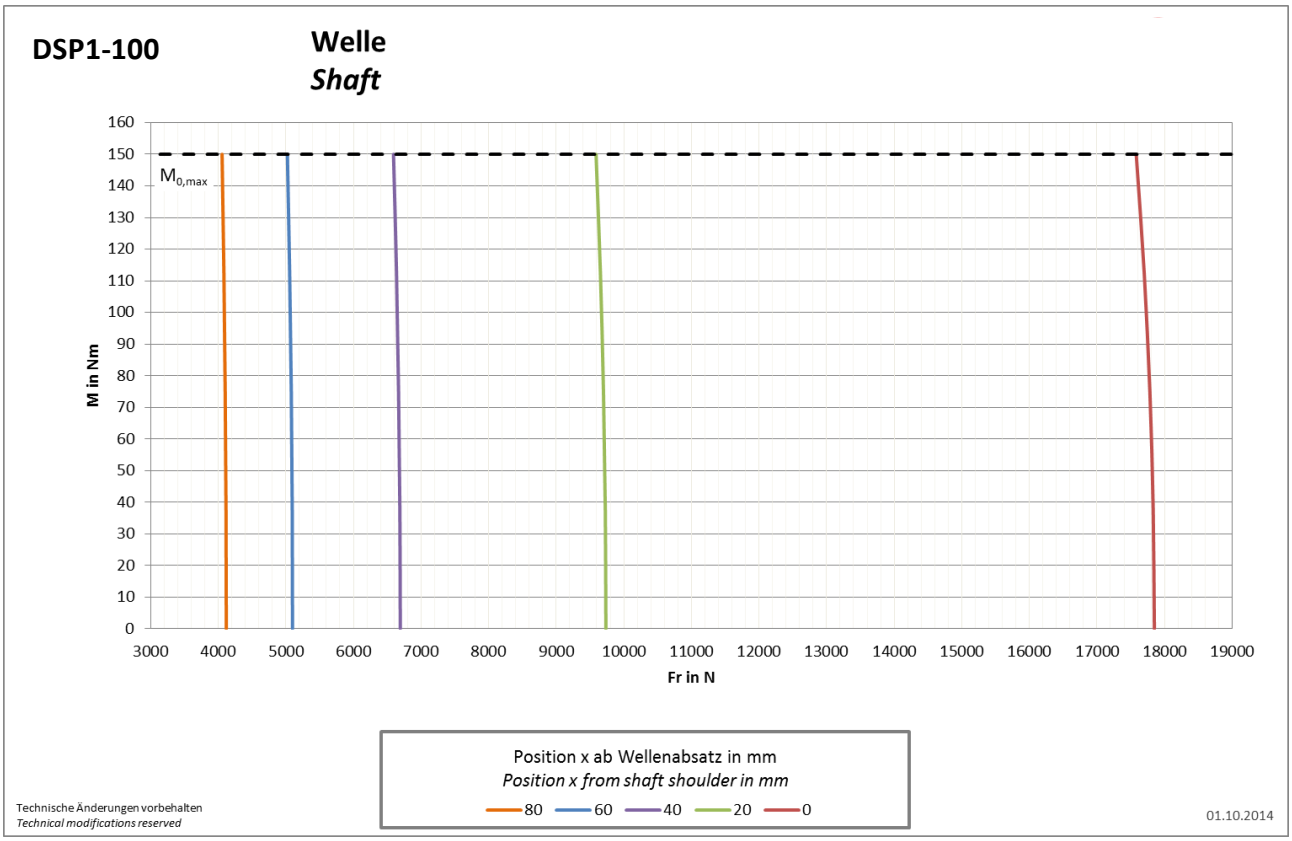
DSP1-100
Welle
Shaft
M0,max
M in Nm
Fr in N
160
150
140
130
120
110
100
90
80
70
60
50
40
30
20
10
0
3000
4000
5000
6000
7000
8000
9000
10000
11000
12000
13000
14000
15000
16000
17000
18000
19000
Position x ab Wellenabsatz in mm
Position x from shaft shoulder in mm
80
60
40
20
0
Technische Änderungen vorbehalten
Technical modifications reserved
01.10.2014

3. Motor components (options)

3.1. Holding brake

The motors can be optionally equipped with a holding brake. The holding brake is a backlash-free permanent magnetic brake. The brakes work according to the closed current principle. i.e. the brake is applied when switched off (or at a failure of the operating voltage). The brakes are designed for an operating voltage of 24 VDC. The specifications by the brake manufacturer apply at room temperature.

The motors are available with the following holding brakes:

Motor type	DSP1-045	DSP1-056	DSP1-071	DSP1-100
Minimal static holding torque [Nm] at 120 °C.	10	20	45	105
Nominal dynamic holding torque [Nm] at 120 °C.	8	18	25	45
Maximum switching energy [J] per braking from n = 3.000 rpm	270	320	1400	2800
Connection values [V] (+6 % / -10 %)	24	24	24	24
Power consumption [W]	18	20	28	50
Moment of inertia [$kgcm^2$]	0.6	2.9	7.9	17.6
Switching time On [ms] Ventilation; with basic air gap	40	65	100	200
Switching time Off [ms] Braking; with basic air gap	20	30	40	50

All brakes are not fail safe brakes in the sense that a torque reduction cannot occur due to immutable malfunction factors. Depending on the application. the relevant accident prevention regulations. as well as basic health and safety requirements of Annex I of the Machinery Directive and the harmonized European standards must be observed.
For emergency stops or power failures. approximately 2.000 brake processes can be performed.
(Condition: maximum external inertia = motor inertia and n_{max} type-related;
Max. braking / hour <20; evenly distributed).

3.2. Fan

	DSP1-056..100			
Rated voltage [V]	24 V DC	115 V AC	230 V AC	
Rated frequency [Hz]	-	60	50	60
Rated current [A]	0.52	0.47	0.22	0.20
Rated speed [rpm]	2758	2394	2385	2099
Power rating [W]	12.4	35	32	30
Connection	6 - pole plug			
Protection type	IP65			

Fan connection 24 V DC / 115 V AC / 230 V AC

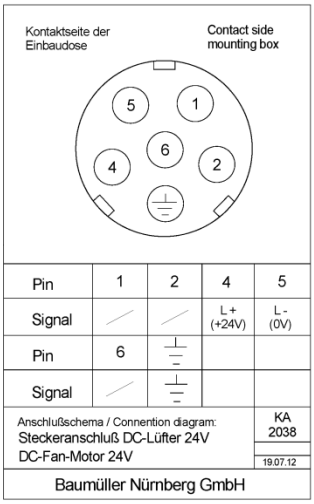

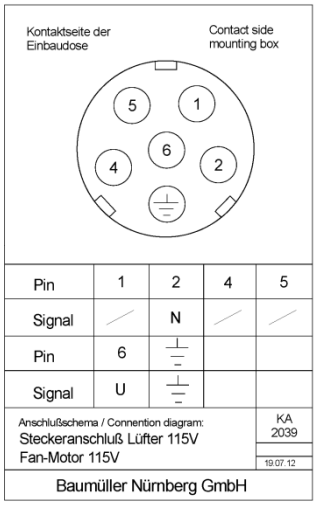

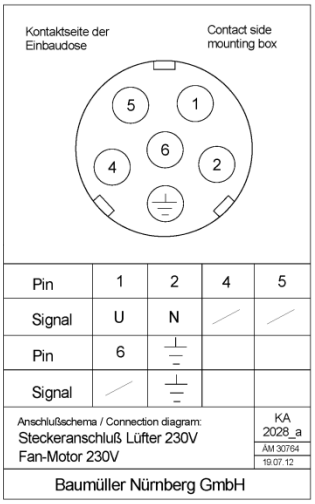

View on the contact side of the socket

3.3. Encoder

3.3.1. (Resolver)

Pole pair number	1	4
Transmission ratio	0.5 ± 0.05	0.5 – 0.05
Frequency	5 kHz	8 kHz
Nominal input voltage	7 V_{rms}	6.3 V_{rms}
Effective input power at no-load speed	112 mW	135 mW
Current consumption at no-load speed	70 mA	45 mA
Max. output voltage at no-load speed	3.5 V ± 10%	3.15 V ± 10%
Voltage constant	61 mV/°	209 mV/°
Stator impedance with short circuit and maximum coupling	97 + j 183Ω ± 15%	422 + j 1345Ω
Phase shift	8° ± 3°	6° ± 3°
Zero voltage	30 mV	30 mV
Angle error in relation to $(\Delta\varphi_{max}+\Delta\varphi_{min})/2$	± 6'	± 6'
Shock according to DIN EN 60068-2-27 (11 ms)	≤ 1000 m/s²	≤ 1000 m/s²
Vibration according to DIN EN 60068-2-6	≤ 500 m/s² (55-2000 Hz)	≤ 500 m/s² (10-500 Hz)

Resolver connection

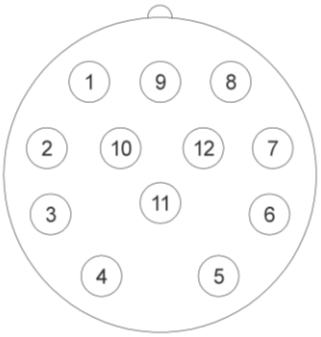

View on the contact side of the socket

Pin	Signal	Assignment option PT1000 (R1/R2) on encoder socket
1	cos -	cos -
2	-	-
3	-	-
4	-	-
5	sin -	sin -
6	sin +	sin +
7	-	R2
8	cos +	cos +
9	-	R1
10	ref +	ref +
11	-	-
12	ref -	ref -

NOTE:
Use only at low demands on the true running characteristics of the motor.
The specifications are information by the encoder manufacturer.

3.3.2. Resolver for safety-related applications

Motor size	DSP1-045-100
Pole pair number	1
Transmission ratio	0.5 ± 0.05
Frequency	5 kHz
Safety integrity level	SIL 3 (IEC 61508) in combination with b maXX5000
Performance level	PL e (EN ISO 13849) in combination withmit b maxx5000
Maximum angular acceleration	100.000 rad/s²
Effective input power at no-load speed	112 mW
Nominal input voltage	7 V_{rms}
Current consumption at no-load speed	70 mA
Max. output voltage at no-load speed	3.5 V ± 10%
Voltage constant	61 mV/°
Rotor resistance	48 Ω ± 10%
Stator resistance	31 Ω ± 15%
Rotor impedance at no-load speed	70 + j 74Ω ± 15%
Rotor impedance with short circuit	62 + j 66Ω ± 15%
Stator impedance at no-load speed with minimum coupling	108 + j 206Ω ± 15%
Stator impedance with short circuit and maximum coupling	97 + j 183Ω ± 15%
Phase shift	8° ± 3°
Zero voltage	30 mV
Angle error related to $(\Delta\varphi_{max}+\Delta\varphi_{min})/2$	± 6’
Shock according to DIN EN 60068-2-27 (11 ms)	≤ 1000 m/s²
Vibration according to DIN EN 60068-2-6 (55-2000 Hz)	≤ 500 m/s²

Resolver connection

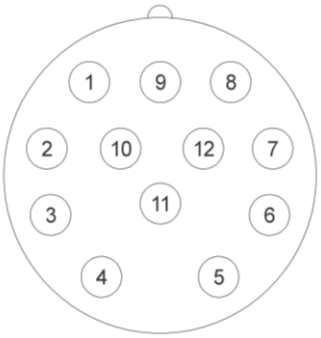

View of contact side of the socket

Pin	Signal	Assignment option PT1000 (R1/R2) at encoder socket
1	cos -	cos -
2	-	-
3	-	-
4	-	-
5	sin -	sin -
6	sin +	sin +
7	-	R2
8	cos +	cos +
9	-	R1
10	ref +	ref +
11	-	-
12	ref -	ref -

NOTE:
Use only. if the requirements to the smooth running characteristics of the motor are low.
The technical data were specified by the encoder manufacturer.

Information regarding configuration options of the safety encoder with the different motor versions can be abstracted from the product configurator

3.3.3. SINCOS SEK/SEL37 (SICK)

Motor size	DSP1-045-100	
	SEK37	SEL37
Number of sine-, cosine periods per revolution	16	
Measuring step at interpolation of the sine-, cosine periods such as with 12 bits	20“	
Number of absolutely completed revolutions	1	4.096
Code type for the absolute value	binary	
Error limits at the evaluation of the sine-, cosine periods; integral non-linearity	+/- 288“	
Non-linearity within a sine-, cosine period, differential non-linearity at nominal position +/- 0.1mm	+/- 144“	
Operating speed up to which the absolute position can be made	6.000 1/min	
Maximum operating speed	12.000 1/min	
Output signal	serial RS 485, asynchronous, half duplex	
Operating voltage range	7-12 V	
max. operating current without load	50 mA	
Shock according to DIN EN 60068-2-27 (10 ms)	980 m/s²	
Vibration according to DIN EN 60068-2-6 (10-2000 Hz)	490 m/s²	

SEK/SEL37 Connection

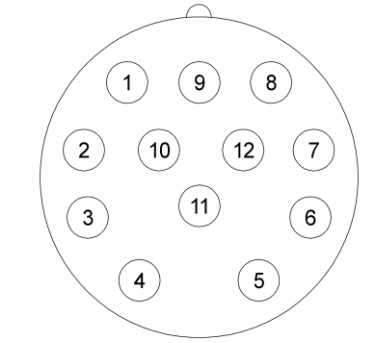

Pin	Signal	Assignment option PT1000 (R1/R2) at encoder socket
1	cos -	cos -
2	+ 485	+ 485
3	-	R1
4	-	R2
5	sin +	sin +
6	sin -	sin -
7	- 485	- 485
8	cos +	cos +
9	-	-
10	GND	GND
11	-	-
12	+ U	+ U

View on the contact side of the socket

NOTE:
Relevant for the sizes 045-100

SEK/SEL37 – with mechanical adaption	The notch position is 0°(identical to SEK/SEL52 encoders)

This encoder is a component susceptible to ESD.
The technical data is specification from the encoder manufacturer.

3.3.4. SINCOS SRS/SRM50 (SICK)

Motor size	DSP1-045-100	
	SRS50	SRM50
Number of sine and cosine periods per revolution	1024	
Number of steps per revolution	32768	
Number of absolute completed revolutions	1	4096
Code type for the absolute value	Binary	
Output frequency of the sine and cosine signals	0-200 kHz	
Fault limits in evaluation of the sine, cosine signals; integral non-linearity in the relaxed state	+/-45”	
Nonlinearity within a sine or cosine period; differential nonlinearity	+/- 7”	
Maximum speed at which the absolute position can be defined	6000 rpm	
Maximum operating speed	12000 rpm	
Output signals: 2 x 90° offset sinusoidal signals	1 V_{SS}	
Output signal	Serial RS 485, asynchronous, half-duplex	
Operating voltage range	7-12 V	
Operating current without load	80 mA	
Shock according to DIN EN 60068-2-27	100 g / 10 ms	
Vibration according to EN 60068-2-6 (10-2000 Hz)	20 g	

SRS/SRM50 connection

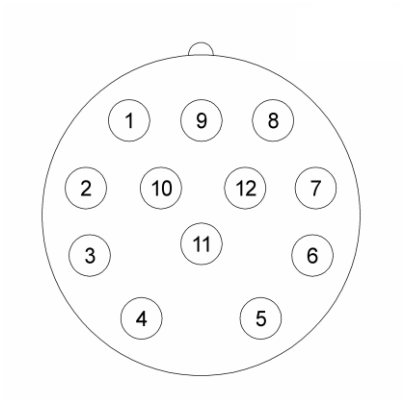

Pin	Signal	Assignment option PT1000 (R1/R2) at encoder socket
1	cos -	cos -
2	+ 485	+ 485
3	-	R1
4	-	R2
5	sin +	sin +
6	sin -	sin -
7	- 485	- 485
8	cos +	cos +
9	-	-
10	GND	GND
11	-	-
12	+ U	+ U

View on the contact side of the socket

NOTE:
This encoder is a component susceptible to ESD.
The technical data is specification from the encoder manufacturer.

3.3.5. SINCOS SRS/SRM50-S (SICK)

Motor size	DSP1-045-100	
	SRS50-S	SRM50-S
Safety integrity level	SIL2 (IEC 61508), SILCL2 (IEC 62061)	
Category	3 (EN ISO 13849)	
Performance Level	PL d (EN ISO 13849)	
Maximum angular acceleration	200.000 rad/s^2	
Number of sine-, cosine periods per revolution	1.024	
Number of steps per revolution	32.768	
Number of the absolutely completed revolutions	No. of the absolutely completed revolutions	1
Code type of the absolute value	binary	
Output frequency of the sine-, cosine signals	0-200 kHz	
Error limits at the evaluation of the sine-, cosine signals, integral non-linearity	+/- 45“	
Non-linearity within a sine-, cosine period, differential non-linearity	+/- 7“	
Operating speed up to which the absolute position can be made	6.000 1/min	
Maximum operating speed	12.000 1/min	
Output signals; 2x90° shifted sine-shaped signals	1 V_{ss}	
Output signal	serial RS 485, asynchronous, half duplex	
Operating voltage range	7-12 V	
Operating current without load	80 mA	
Shock according to DIN EN 60068-2-27	980 m/s² (10 ms)	
Vibration according to DIN EN 60068-2-6 (10-2000 Hz)	196 m/s²	

SRS/SRM50-S Anschluss

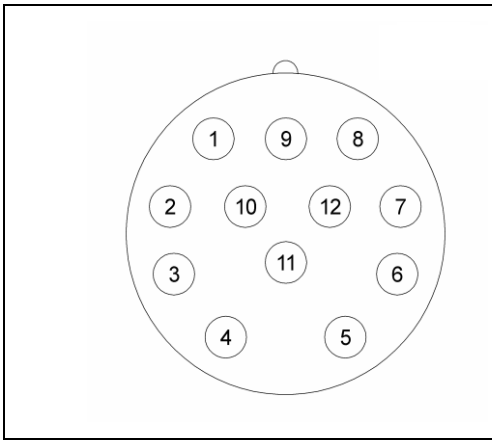

Pin	Signal	Assignment option PT1000 (R1/R2) at encoder socket
1	cos -	cos -
2	+ 485	+ 485
3	-	R1
4	-	R2
5	sin +	sin +
6	sin -	sin -
7	- 485	- 485
8	cos +	cos +
9	-	-
10	GND	GND
11	-	-
12	+ U	+ U

View on the contact side of the socket

NOTE:
This encoder is a ESD-sensitive device. The technical data is an information of the encoder manufacturer. The configuration options of the safety encoder with different motor versions can be taken from the product configurator. The combination SRS/SRM50-S with installation gear is available on request.

3.3.6. EES37/EEM37 Hiperface DSL® (SICK)

Motor size	DSP1-045-100	
	EES37	EEM37
Number of the absolutely completed revolutions	1 (15 bit)	4096 (15 bit)
Code type of the absolute value	Binary	
Interface signals	Digital, RS-485	
Position values/revolution	32.768	
Maximum angular acceleration	500.000 rad/s²	
Maximum operating speed	12.000 1/min	
Voltage supply	7…12 V	
Current consumption without load	≤ 150 mA	
Shock according to DIN EN 60068-2-27 (6 ms)	980 m/s²	
Vibration according to DIN EN 60068-2-6 (10-2000 Hz)	490 m/s²	
Working temperature	-40°C…+115°C	

Connection EES37/EEM37 DSL Hiperface

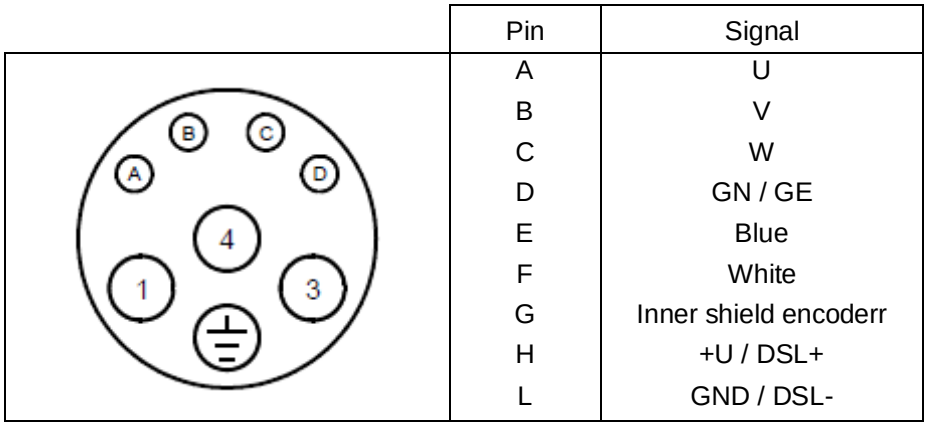

Pin	Signal
A	U
B	V
C	W
D	GN / GE
E	Blue
F	White
G	Inner shield encoderr
H	+U / DSL+
L	GND / DSL-

View on the contact side of the socket size 1

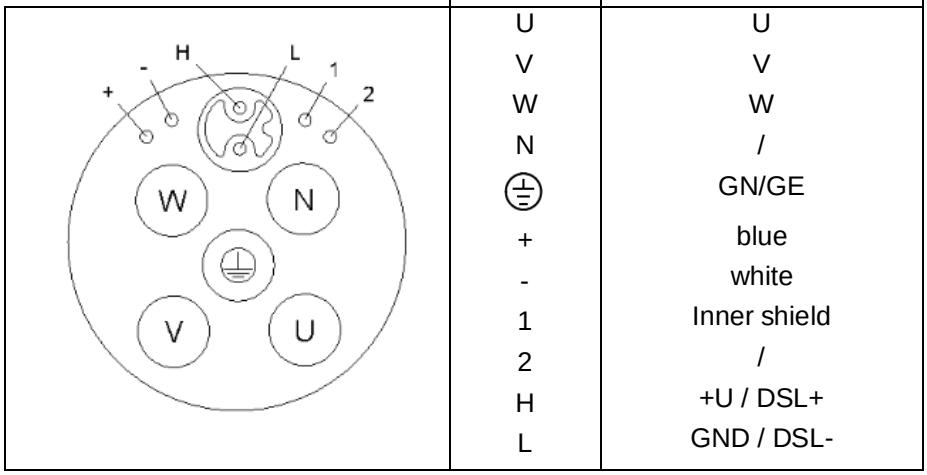

Pin	Signal
U	U
V	V
W	W
N	/
⏚	GN/GE
+	blue
-	white
1	Inner shield
2	/
H	+U / DSL+
L	GND / DSL-

View on the contact side of the socket size 1.5

The configuration options of the Hiperface DSL encoder with different motor versions can be taken from the product configurator. The encoder can be used up to a cable length of 60 m.

3.3.7. EFS50/EFM50 Hiperface DSL® (SICK)

Motor size	DSP1-045-100	
	EFS50	EFM50
Number of absolutely completed revolutions	1 (21 bit)	4096 (21 bit)
Code type of the absolute value	Binary	
Interface signals	Digital, RS-485	
Positioning values/revolution	2.097.152	
Maximum angular acceleration	200.000 rad/s²	
Maximum operating speed	12.000 1/min	9.000 1/min
Voltage supply	7…12 V	
Current consumption without load	≤ 150 mA	
Shock according to DIN EN 60068-2-27 (6 ms)	980 m/s²	
Vibration according to DIN EN 60068-2-6 (10-2000 Hz)	196 m/s²	
Working temperature	-20°C…+120°C	

Connection EFS50/EFM50 DSL Hiperface

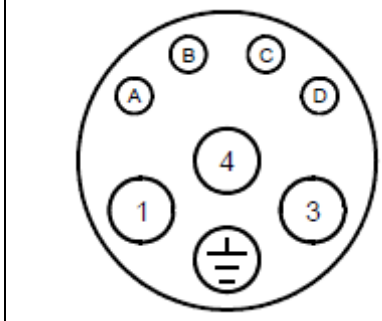

Pin	Signal
A	U
B	V
C	W
D	GN / GE
E	blue
F	white
G	Inner shield encoder
H	+U / DSL+
L	GND / DSL-

View on the contact side of the socket size 1

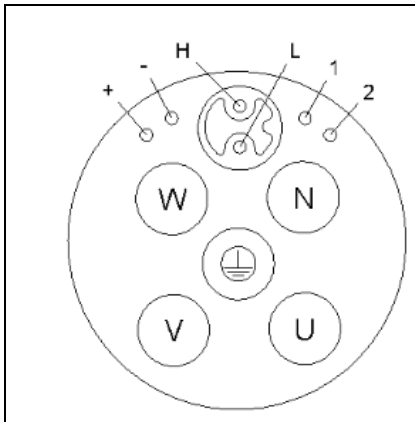

Pin	Signal
U	U
V	V
W	W
N	/
⏚	GN/GE
+	Blue u
-	white
1	Inner shield
2	/
H	+U / DSL+
L	GND / DSL-

View of the contact side of the socket size 1.5

The configuration options of the Hiperface DSL encoder with different engine versions can be found in the product configurator. The encoders can be used up to a cable length of 60 m.

3.3.8. ECN1313/EQN1325 (Heidenhain)

Motor size	DSP1-045-100	
	ECN 1313	EQN 1325
Number of sine and cosine periods per revolution	2.048	
System accuracy	± 20“	
Number of absolute completed revolutions	1	4.096 (12 bit)
Code type for the absolute value	EnDat 2.1	
Sampling limit frequency or limit frequency	0-200 kHz	
Position values/revolution	8.192 (13 bit)	
Maximum speed at which the absolute position can be defined	12.000 1/min	
Maximum operating speed (1/min)	12.000 1/min	
Voltage supply	3,6-14 V	
Current consumption without load	≤ 160 mA	≤ 200 mA
Shock 6ms as per DIN EN 60068-2-27 (6 ms)	≤ 2.000 m/s²	
Vibration 55-2000Hz as per DIN EN 60068-2-6 (55-2000 Hz)	≤ 300 m/s²	

ECN1313/EQN1325 Anschluss

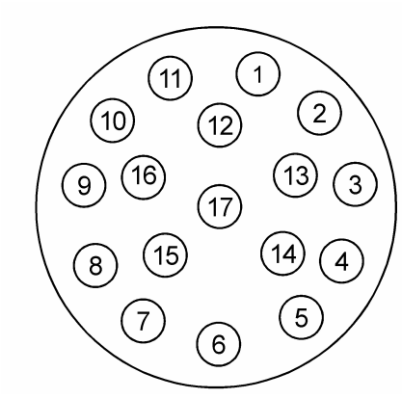

Pin	Signal	Assignment option PT1000 (R1/R2) at encoder socket
1	U_p	U_p
2	-	-
3	-	-
4	0V	0V
5	-	R1
6	-	R2
7	U_p	U_p
8	Clock	Clock
9	Clock inv.	Clock inv.
10	0V	0V
11	-	-
12	B +	B +
13	B -	B -
14	Data	Data
15	A +	A +
16	A -	A -
17	Data inv.	Data inv.

View on the contact side of the socket

NOTE:
This encoder is a component susceptible to ESD.
The technical data is specification from the encoder manufacturer.

3.3.9. ECI1319/EQI1331 (Heidenhain)

Motor size	DSP1-056-100	
	ECI 1319	EQI 1331
Number of lines	-	
System accuracy	± 65“	
Number of absolutely completed revolutions	1	4096 (12 bit)
Code type for the absolute value	EnDat 2.2	
Position values/revolution	524 288 (19 bit)	
Maximum speed at which the absolute position can be defined	15000 1/min	
Maximum operating speed	15000 1/min	12000 1/min
Power supply	3,6…14 V	
Current consumption without load	95 mA	95 mA
Shock 6ms according to DIN EN 60068-2-27 (6ms)	≤ 2000 m/s²	
Vibration 55-2000Hz according to DIN EN 60068-2-6 (55-2000 Hz)	≤ 400 m/s²	

ECN1319/EQN1331 connection

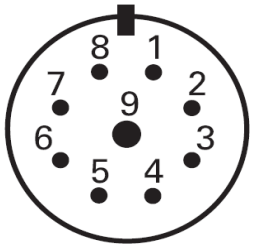

Pin	Signal
1	Clock
2	Clock inv.
3	U_p
4	0V
5	Data
6	Data inv.
7	Sensor U_p
8	Sensor 0V
9	-

View on the contact side of the socket

NOTE:
This encoder is a component susceptible to ESD.
The technical data is specification from the encoder manufacturer.

3.3.10. ECI1319/EQI1331-S (Heidenhain)

Motor size	DSP1-056-100	
	ECI 1319-S	EQI 1331-S
Number of lines	-	
System accuracy	± 65“	
Number of absolutely completed revolutions	1	4096 (12 bit)
Code type for the absolute value	EnDat 2.2	
Position values/revolution	524 288 (19 bit)	
Maximum speed at which the absolute position can be defined	15000 1/min	
Maximum operating speed	15000 1/min	12000 1/min
Power supply	3,6…14 V	
Current consumption without load	95 mA	95 mA
Shock 6ms according to DIN EN 60068-2-27 (6ms)	≤ 2000 m/s²	
Vibration 55-2000Hz according to DIN EN 60068-2-6 (55-2000 Hz)	≤ 400 m/s²	

ECN1319/EQN1331-S connection

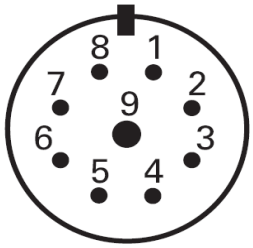

Pin	Signal
1	Clock
2	Clock inv.
3	U_p
4	0V
5	Data
6	Data inv.
7	Sensor U_p
8	Sensor 0V
9	-

View on the contact side of the socket

NOTE:
This encoder is a component susceptible to ESD.
The technical data is specification from the encoder manufacturer.

3.3.11. ECN1325/EQN1337 (Heidenhain)

Motor size	DSP1-045-100	
	ECN 1325	EQN 1337
Number of lines	2048	
System accuracy	± 20“	
Number of absolute completed revolutions	1	4096 (12 bit)
Code type for the absolute value	EnDat 2.2	
Position values/revolution	33554432 (25 bit)	
Maximum speed at which the absolute position can be defined	12000 1/min	
Maximum operating speed	12000 1/min	
Power supply	3,6…14 V	
Current consumption without load	≤ 160 mA	≤ 200 mA
Shock 6ms according to DIN EN 60068-2-27 (6ms)	≤ 2000 m/s²	
Vibration 55-2000Hz according to DIN EN 60068-2-6 (55-2000 Hz)	≤ 300 m/s²	

ECN1325/EQN1337 connection

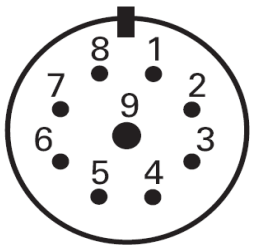

Pin	Signal
1	Clock
2	Clock inv.
3	U_p
4	0V
5	Data
6	Data inv.
7	Sensor U_p
8	Sensor 0V
9	-

View on the contact side of the socket

NOTE:
This encoder is a component susceptible to ESD.
The technical data is specification from the encoder manufacturer.

3.3.12. ECN 1325/EQN1337-S (Heidenhain)

Motor size	DSP1-045-100	
	ECN1325-S	EQN1337-S
Safety integrity level	SIL 2 nach EN 61508	
Category	3 (EN ISO 13849)	
Performance Level	PL d (EN ISO 13849)	
Maximum angular acceleration	50.000 rad/s²	
Pulses per revolution	2.048	
System accuracy	± 20“	
Number of absolute completed revolutions	1	Number of absolute completed revolutions
Code type for the absolute value	EnDat 2.2	
Position values / revolution	33.554.432 (25 bit)	
Maximum speed at which the absolute position can be defined	12.000 1/min	
Maximum operating speed	12.000 1/min	
Power supply	3,6…14 V	
Current consumption without load	≤ 160mA	Current consumption without load
Shock according to DIN EN 60068-2-27 (6 ms)	≤ 2000 m/s²	
Vibration according to DIN EN 60068-2-6 (55-2000 Hz)	≤ 300 m/s²	

ECN1325/EQN1337-S Connection

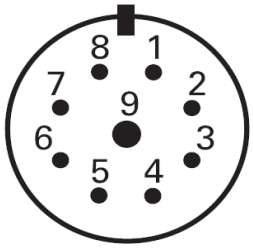

Pin	Signal
1	Clock
2	Clock inv.
3	U_p
4	0V
5	Data
6	Data inv.
7	Sensor U_p
8	Sensor 0V
9	-

View of the contact side of the socket

NOTE:
This encoder is a component susceptible to ESD.
The technical data is the specifications of the encoder manufacturer.

The configuration options for the safety encoders with different engine versions can be found in the product configurator.

The combination ECN1325/EQN1337-S with add-on gearbox is available by request. These encoders are not available for uncooled motors with $n_{medium} \geq 4500\ min^{-1}$.

3.4. Encoder cables for b maXX 4000

General Information
A prefabricated encoder cable is used for all encoder systems. The connection at the motor end consists of a 12-pole circular signal connector. The connection at the controller side consists of a 15-pole D-Sub connector.

The dragable cable is suitable for mobile applications such as dragging chains. for example. Unlike non-dragable cables made from PVC. the cable sheath is made from durable PU (suitable for environments where acids and bases are present).

3.4.1. Technical data

Technical description - non-dragable
- LiYCY. 5x (2x0.14mm²) + 2 x 0.5mm² copper strand. twisted pairs
- PVC sheath. grey; inscription with Baumüller logo. black
- 1st side: 12-pole circular signal plug connector with 12 socket contacts
- 2nd side: 15-pole D-Sub plug connector with pin contacts and locking screws 4-40UNC
- Outer diameter 9.0 mm (+/- 0.3mm)
- Bending radius: $r \geq 60$ mm (fixed routing). $r \geq 135$ mm (flexible use)
- Nominal voltage: $250V_{AC}$

Technical description - dragable
- Li12YC11Y. 5x (2x0.14mm²) + 2 x 0.5mm² copper strand. twisted pairs
- PU sheath. black; inscription with Baumüller logo. white
- 1st side: 12-pole circular signal plug connector with 12 socket contacts
- 2nd side: 15-pole D-Sub plug connector with pin contacts and locking screws 4-40UNC
- Outer diameter 9.0 mm (+/- 0.3mm)
- Bending radius: $r \geq 70$ mm (fixed routing). $r \geq 100$ mm (flexible use)
- Nominal voltage: $300V_{AC}$

3.4.2. Application references

- **Operating temperature of encoder cable**

	Dragable	Not dragable
Limit temperature	on the surface	on the surface
Static use/minimal movement	- 40 °C to + 80 °C	- 30 °C to + 80 °C
Permanent movement	- 30 °C to + 80 °C	- 5 °C to + 70 °C

Routing of cable on motor

The cables must not touch the surface of the motor.

3.4.3. Order information for encoder cables

Encoder cables for resolver - prefabricated cables with connector

Not dragable. prefabricated
Cable 5 x (2x0.14mm^2) + 2 x 0.5 mm^2 with plug connector

Length in [m]	Item Number
1	243601
2	211338
3	219333
4	231166
5	209879
6	220197
7	216455
8	220429
10	210052
15	215716
20	218568
25	218569
30	217094
35	216444
40	217095
45	217567
50	217568
55	217569
60	217570
70	232088

Dragable. prefabricated
Cable 5 x (2x0.14mm^2) + 2 x 0.5 mm^2 with plug connector

Length in [m]	Item Number	Item Number (Speedtec)
3	246658	448944
4	243379	448945
5	239540	448948
6	242954	448946
8	239541	448949
10	239542	448956
15	239543	448962
20	239544	448967
25	239545	448970
30	239546	448971
35	239547	448973
40	240520	448976
45	240521	448978
50	240522	448980
55	244033	448981
60	245484	448982

3.5. Encoder cables for b maXX 5000

A prefabricated encoder cable is used for all encoder systems. The connection at the motor end consists of a 12-pole circular signal. The connection at the controller side consists of a 26-pole D-Sub connector.

3.5.1. Technical data

Technical description - dragable

- Li9YC. 1 x (2 x 0.25) + Li9Y. 2 x (2x0.25) + Li9YC11Y. 1 x (2 x 0.34). copper strand. twisted pairs
- PUR sheat. green; inscription with Baumüller Nürnberg and encoder cable Resolver
- 1st side: 12-pole circular signal plug connector with 12 socket contacts
- 2nd side: 26-pole D-Sub plug connector with pin contacts and locking screws 4-40UNC
- Outer diameter 7.3 mm (+/- 0.3mm)
- Bending radius: $r \geq 4 \times D$ (fixed routing). $r \geq 10 \times D$ (flexible use)

Application references

Operating temperature of encoder cable

Limit temperature	on the surface
Static use/minimal movement	- 40 °C to + 80 °C
Permanent movement	- 20 °C to + 60 °C

Routing of cable on motor

The cables must not touch the surface of the motor.

3.5.2. Order information for encoder cables

Encoder cable - prefabricated

For Resolver

Length [m]	Item Number	Item Number. (Speedtec)
1	429914	448746
2	429915	448747
3	429916	448748
5	429917	448749
7	429918	448750
10	429919	448751
15	429920	448752
20	429921	448753
25	429922	448754
30	429923	448755
35	429924	448756
40	429925	448757
50	429926	448758
75	429927	448759

3.6. Motor cables

The motor cables are highly flexible trailing cables with overall shielding. They comply with VDE. UL and CSA regulations. The control cables are integrated as star quads. The brake control and the temperature sensor are connected via the main connector. The cables are particularly suited for the optimum use of cable racks thanks to their small cross-section. low weight. and non-impeding surface. As a result. they can be used efficiently in trailing chains. The overall shielding with an optical coverage of more than 85% makes the cable non-critical from an EMC perspective.

3.6.1. Technical data

- Sheath resistance to media such as coolants and machine and gearbox oils
- Abrasion resistance thanks to a special surface in cable racks and trailing chains
- Highly flexible trailing cable. minimum bending radius for flexible use: 12 x D
- Non-blocking sheath surface with satin finish
- Shield made of tinned copper braid with optical coverage of ≥ 85%
- Core insulation made from TPE or polyester. sheath material: Halogen-free PUR
- Cable is CFC and silicone-free
- Behavior in the event of fire: Fire-inhibiting. halogen-free
- Cable color RAL 1028. melon yellow
- Label features Baumüller logo and VDE. UL and CSA marks

Rated voltage
- Uo/U 600/1.000 V (power cores)
- U 24 V DC (control cores)

Core labeling
- Power cores U. VV. WWW
- Colored control cable pairs as star quads in red. white. black. yellow

Assignment of pairs: (note the polarity)
- Red – black (brake)
- white – yellow (temperature)

3.6.2. Main connection via connector

Note:
The connector size is determined by the standstill current I_0 of the motor used.
Motors with a standstill current of ≤ 20A feature a size 1 main connector.
For standstill currents of 20 A< I_0 ≤ 36 A. a size 1.5 main connector is used.
A terminal box must be used at a I_0 > 36A.

Poles of the female main connectors:

		Pin	Signal	Color/labeling
Size 1 I_0 ≤ 20 A	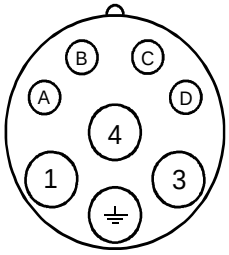	1	Phase U	U
		⏚	PE	Green/yellow
		3	Phase V	V V
		4	Phase W	W W W
		A	B+	Red
		B	B-	Black
		C	K-	White
		D	K+	Yellow

View of contact side of female connector

		Pin	Signal	Color/labeling
Size 1.5 $I_0 \leq 36$ A	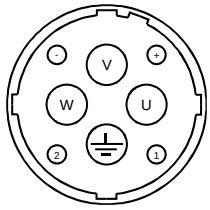	U V W ⏚ + - 1 2	Phase U Phase V Phase W PE B+ B- K- K+	U V V W W W green / yellow Red Black White Yellow

View of contact side of female connector

Cable cross-section [2)]	**Rated current [A][1) 2)]**	**Connector 540 V Size [2)]**	**Cable diameter [2)] [mm]**
4×1.5 mm² + 4×0.75 mm²	15	1	11.7 – 12.3
4×2.5 mm² + 4×0.75 mm²	20	1	12.7 – 14.6
4×4 mm² + 4×0.75 mm²	28	1.5	14.2 – 15.4
4×6 mm² + 4×0.75 mm²	36	1.5	16.6 – 17.9
4x10 mm² + 4x0.75 mm²	50	1.5	20.5 – 21.5
4x16 mm² + 4x0.75 mm²	66	-	23.0-25.8
4x25 mm² + 2x(2x1.5 mm²)	84	-	26.3-29.7
4x35 mm² + 2x(2x1.5 mm²)	104	-	30.8-32.5

1) Current carrying capacity acc. to Table 5. laying type C or E VDE 0113/EN 60204 Part 1 issue 1997) Ambient temperature 40 °C
2) Deviating regulations apply for cULus approved motors

3.6.3. Main connection via terminal boxes

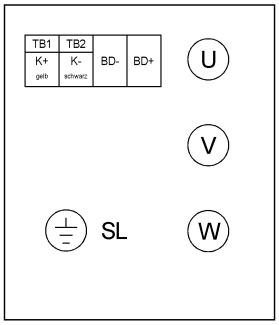

Connection diagram

U V W	Power connection
1R1 / 1R2	Temperature sensor
BD+ / BD-	Brake
SL	Earth wire

3.6.4. Application notes

Operating temperature
The cables can be operated within a temperature range of between -20 °C and +80 °C.

Cable laying at the motor
The cables must not touch the motor surface.
.
Smallest permissible bending radii
12x outer cable diameter

3.6.5. Ordering data for main connection cables

Rated current: 15 A
Cable 4 x 1.5 mm² + 4 x 0.75 mm²
With connector size 1

Length in m	Item Number Speedtec
5	445872
7	445887
10	445889
15	447675
20	447676
25	447677
30	447678
35	447679
40	447680
50	447681
75	447682
100	447683

Rated current: 20 A
Cable 4 x 2.5 mm² + 4x 0.75 mm²
With connector size 1

Length in m	Item Number Speedtec
5	447684
7	447687
10	447688
15	447692
20	447698
25	447852
30	447853
35	447854
40	447855
50	447856
75	447857
100	447858

Rated current: 21 A
Cable 4 x 2.5 mm² + 4x 0.75 mm²
With connector size 1.5

Length in m	Item Number Speedtec
5	447686
7	447689
10	447690
15	447691
20	447693
25	447694
30	447695
35	447696
40	447697
50	447699
75	448060
100	448061

Rated current: 28 A
Cable 4 x 4 mm² + 4x 0.75 mm²
With connector size 1.5

Length in m	Item Number Speedtec
5	448063
7	448064
10	448065
15	448066
20	448067
25	448069
30	448070
35	448071
40	448072

Rated current 36 A
Cable 4 x 6 mm² + 4x 0.75 mm²
With connector size 1.5

Length in m	Item Number Speedtec
5	448080
7	448118
10	448119
15	448120
20	448121
25	448122
30	448123
35	448124
40	448125

Rated current: 50 A
Cable 4 x 10 mm² + 4x 0.75 mm²
With connector size 1.5

Length in m	Item Number Speedtec
5	448129
7	448131
10	448132
15	448133
20	448134
25	448135
30	448136
35	448137
40	448138

Mating Plug

Type		Art. Nr.	Art. Nr. Speedtec
Gr. 1	4x1,5mm² o. x2,5mm²	261740	445486
Gr. 1	4x2,5mm² bis 4x4mm²		500064
Gr. 1,5	4x2,5mm² bis 4x6mm²	326574	445487
Gr. 1,5	4x10mm²	326569	445488

3.7. Dimensional drawings for equipment socket and plug

3.7.1. Main connection

Speedtec - rotary angle socket
(Size 1 for Current I_0 up to 20 A)

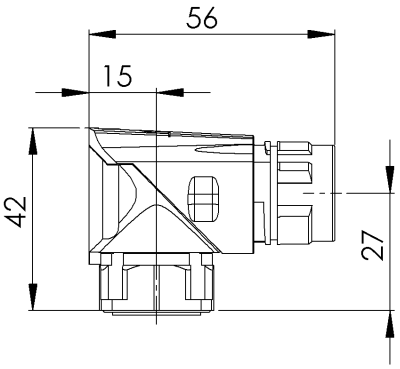

Speedtec - mating connector
(Size 1 for Current I_0 up to 20 A)

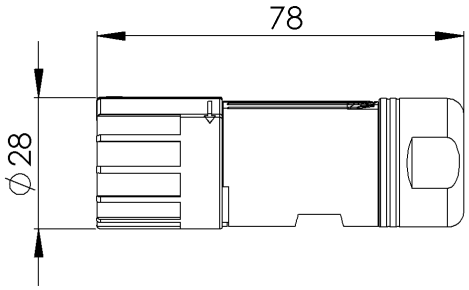

Speedtec - rotary angle socket
(Size 1.5 for Current I_0 up to 36 A)

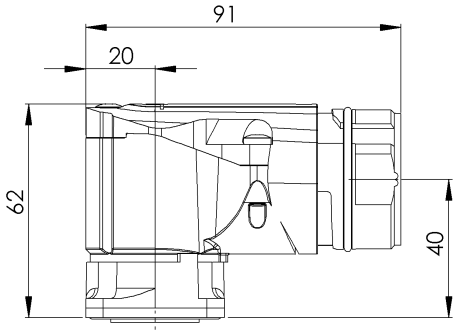

Speedtec - mating connector
(Size 1.5 for Current I_0 up to 36 A)

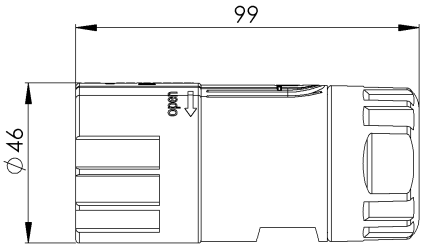

3.7.2. Encoder connection

Speedtec - rotary angle socket

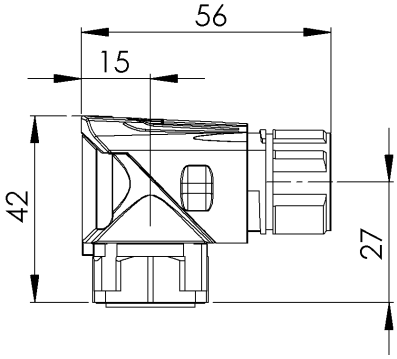

Speedtec - mating connector

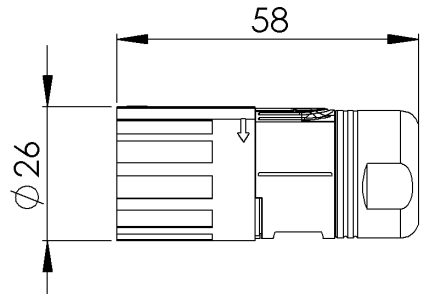

3.8. Thermal sensor

As standard. the motors are equipped with a thermal sensor in the stator winding. the data of which is evaluated in the motor controller. Additional PTCs or thermal sensors can be fitted on request. They are connected through the terminal box. The accordant version must be marked in the ordering key.

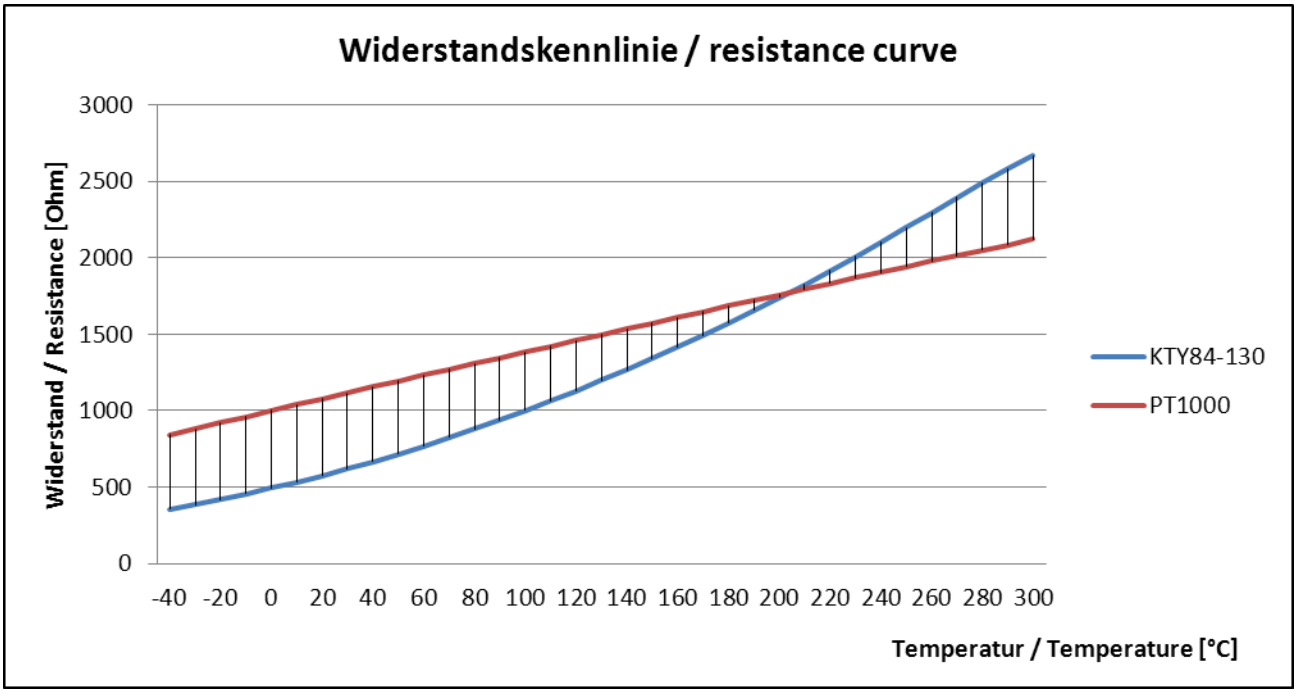

The temperature sensor PT1000 continuously monitors the motor temperature. If the sensor is supplied with a measured current of 2 mA the above shown resistance curve results.

4. Dimension drawings

4.1. Dimension drawings DSP1-045

Dimension drawing DSP1-045….U-..-..-.O.- PP-.-..-O-000
Version IM B5

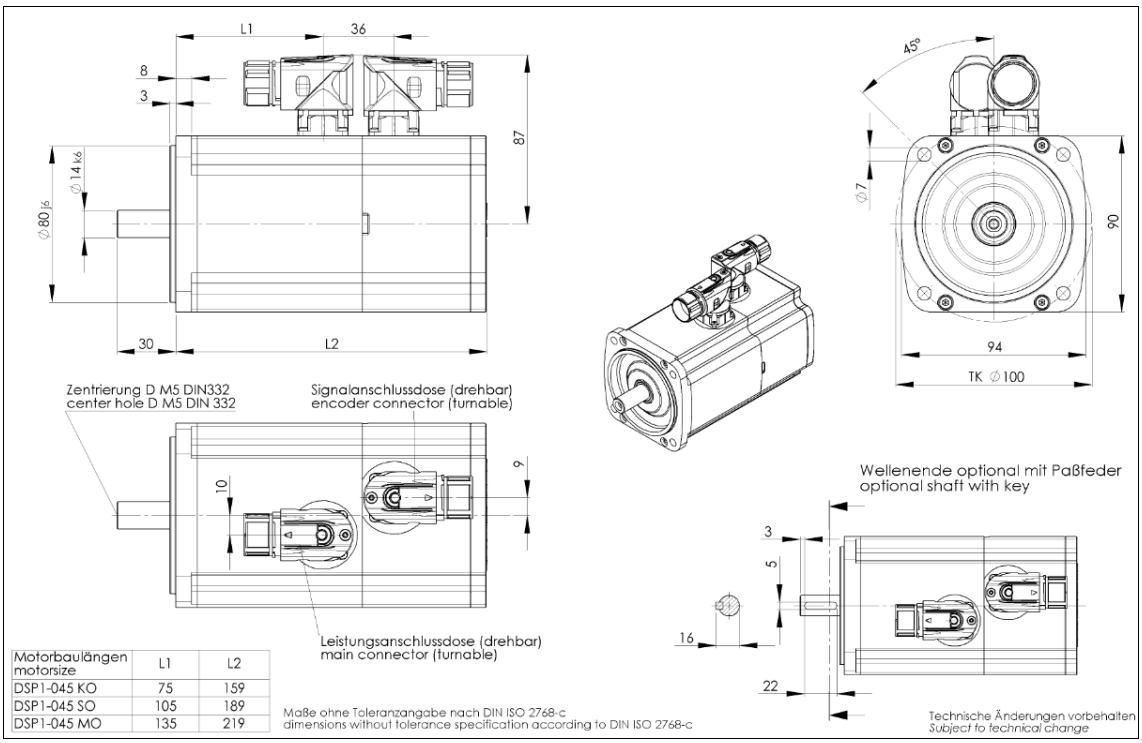

Motorbaulängen motorsize	L1	L2
DSP1-045 KO	75	159
DSP1-045 SO	105	189
DSP1-045 MO	135	219

Maße ohne Toleranzangabe nach DIN ISO 2768-c
dimensions without tolerance specification according to DIN ISO 2768-c

Technische Änderungen vorbehalten
Subject to technical change

Dimension drawing DSP1-045….U-..-..-.B.- PP-.-..-O-000
Version IM B5

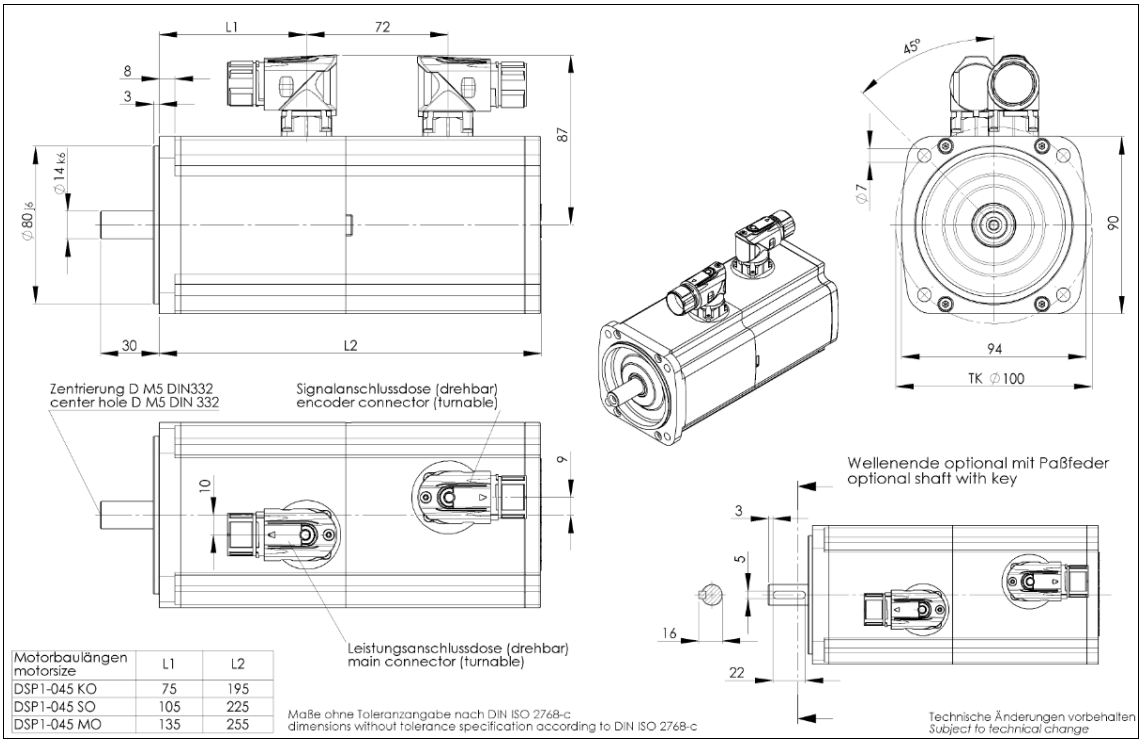

Motorbaulängen motorsize	L1	L2
DSP1-045 KO	75	195
DSP1-045 SO	105	225
DSP1-045 MO	135	255

Maße ohne Toleranzangabe nach DIN ISO 2768-c
dimensions without tolerance specification according to DIN ISO 2768-c

Technische Änderungen vorbehalten
Subject to technical change

Dimension drawing: DSP1-045….W-..-..-.O.-.PP-.-..-O-000

Version IM B5

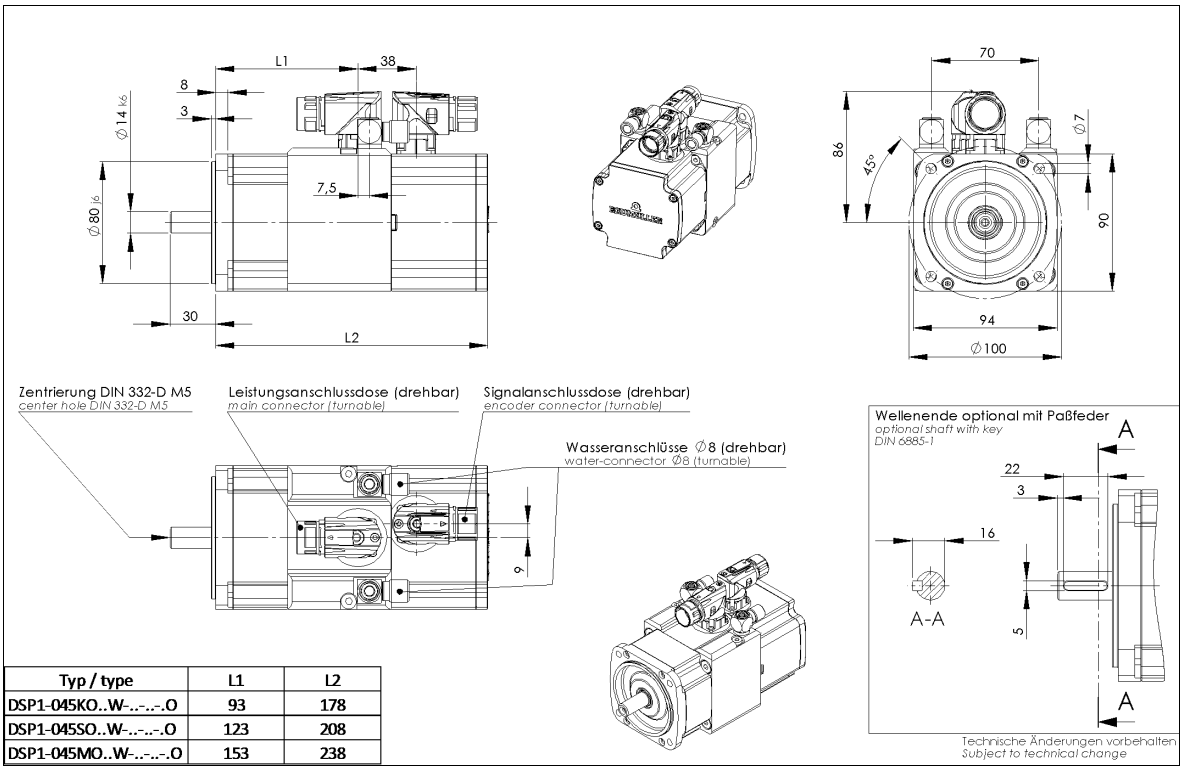

Typ / type	L1	L2
DSP1-045KO..W-..-..-.O	93	178
DSP1-045SO..W-..-..-.O	123	208
DSP1-045MO..W-..-..-.O	153	238

Dimension drawing DSP1-045….W-..-..-.B.-.PP-.-..-O-000

Version IM B5

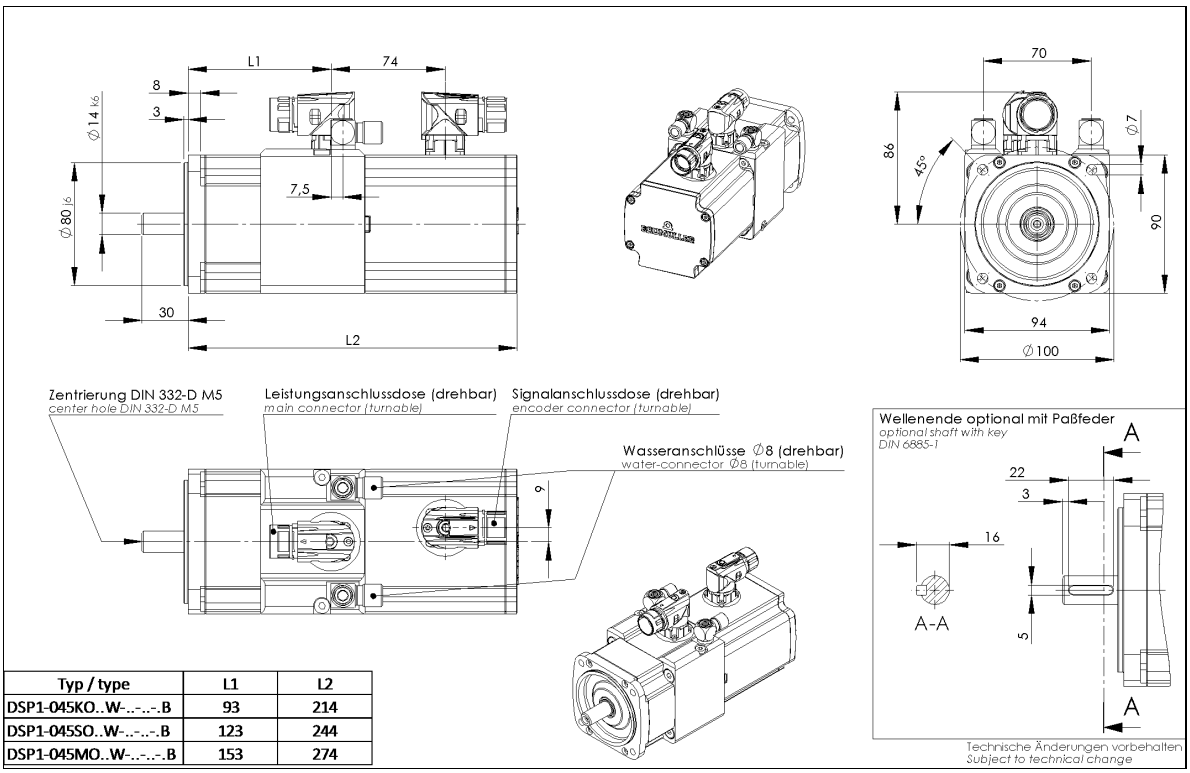

Typ / type	L1	L2
DSP1-045KO..W-..-..-.B	93	214
DSP1-045SO..W-..-..-.B	123	244
DSP1-045MO..W-..-..-.B	153	274

4.2. Dimension drawings DSP1-056

Dimension drawing DSP1-056….U-..-..-.O.- PP-.-..-O-000
Version IM B5

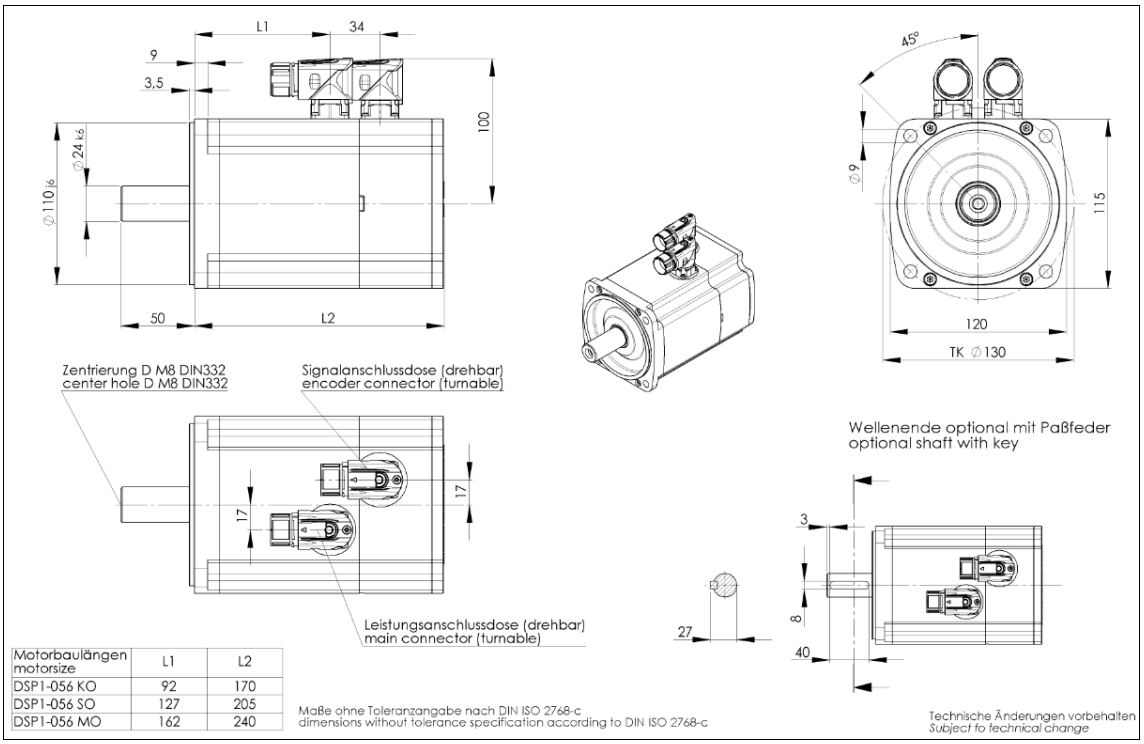

Motorbaulängen motorsize	L1	L2
DSP1-056 KO	92	170
DSP1-056 SO	127	205
DSP1-056 MO	162	240

Maße ohne Toleranzangabe nach DIN ISO 2768-c
dimensions without tolerance specification according to DIN ISO 2768-c

Technische Änderungen vorbehalten
Subject to technical change

Dimension drawing DSP1-056….U-..-..-.B.- PP-.-..-O-000
Version IM B5

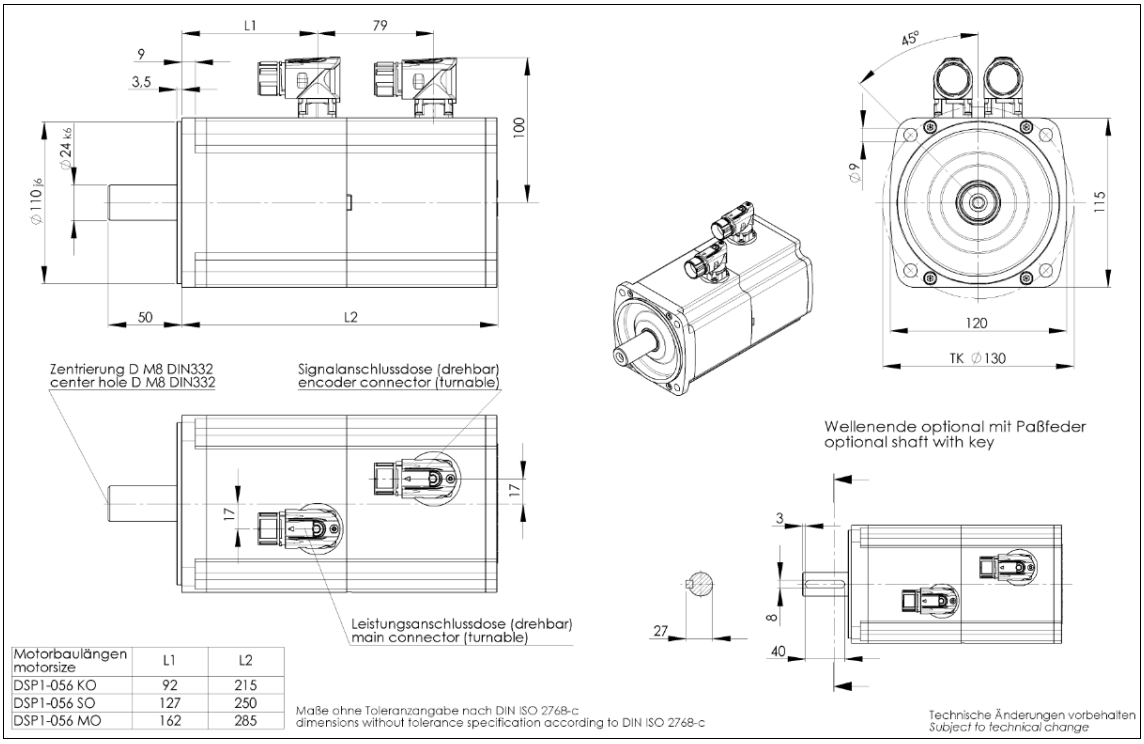

Motorbaulängen motorsize	L1	L2
DSP1-056 KO	92	215
DSP1-056 SO	127	250
DSP1-056 MO	162	285

Maße ohne Toleranzangabe nach DIN ISO 2768-c
dimensions without tolerance specification according to DIN ISO 2768-c

Technische Änderungen vorbehalten
Subject to technical change

Dimension drawing DSP1-056….O-..-..-.O.- PP-.-..-O-000
Version IM B5

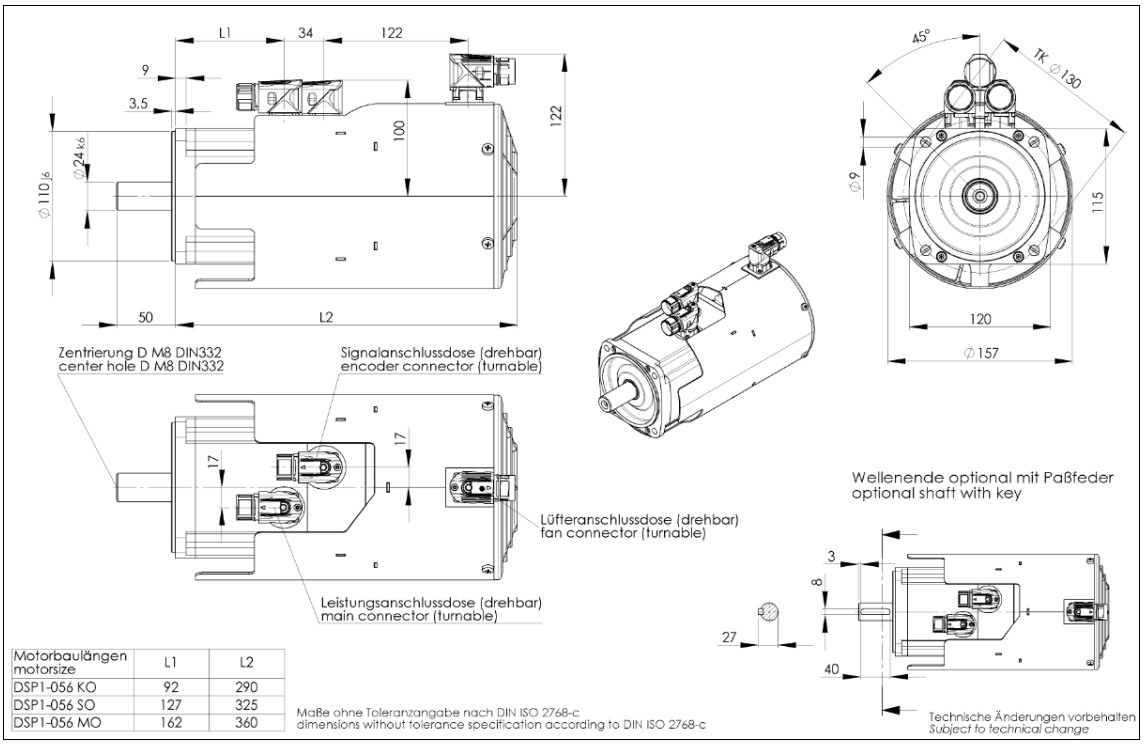

Motorbaulängen motorsize	L1	L2
DSP1-056 KO	92	290
DSP1-056 SO	127	325
DSP1-056 MO	162	360

Maße ohne Toleranzangabe nach DIN ISO 2768-c
dimensions without tolerance specification according to DIN ISO 2768-c

Technische Änderungen vorbehalten
Subject to technical change

Dimension drawing DSP1-056….O-..-..-.B.- PP-.-..-O-000
Version IM B5

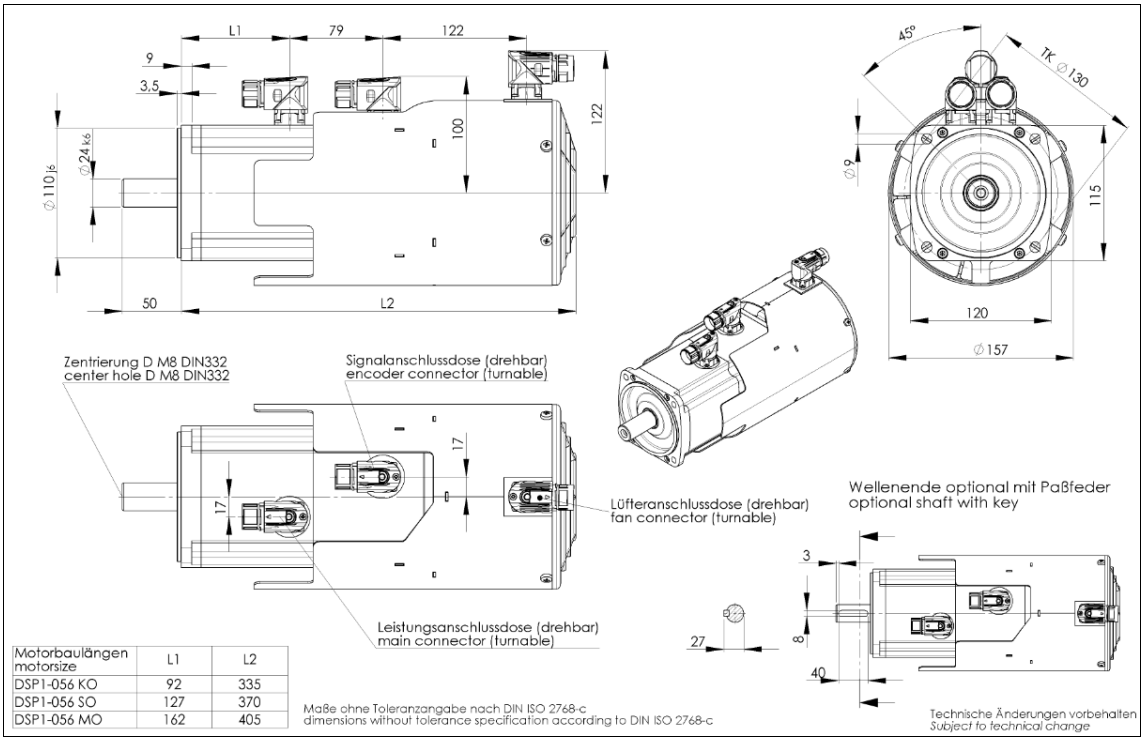

Motorbaulängen motorsize	L1	L2
DSP1-056 KO	92	335
DSP1-056 SO	127	370
DSP1-056 MO	162	405

Maße ohne Toleranzangabe nach DIN ISO 2768-c
dimensions without tolerance specification according to DIN ISO 2768-c

Technische Änderungen vorbehalten
Subject to technical change

Dimension drawing DSP1-056….W-..-..-.O.-.PP-.-..-O-000

Version IM B5

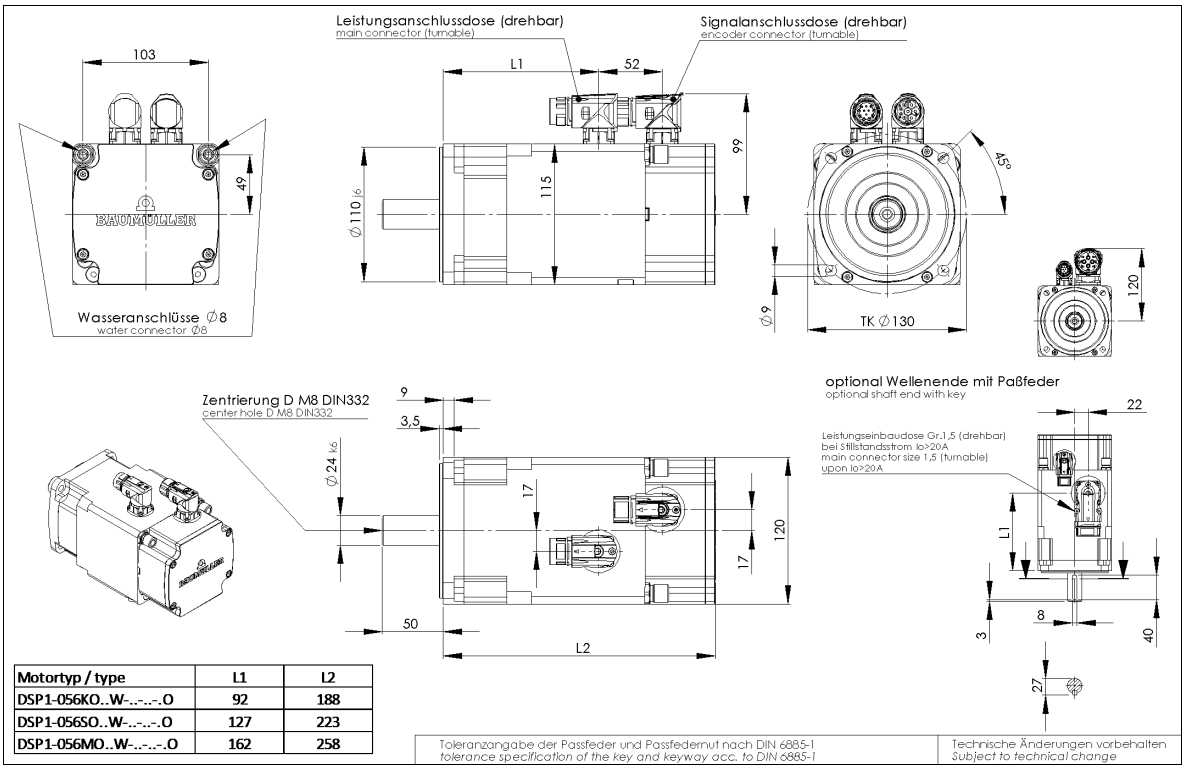

Motortyp / type	L1	L2
DSP1-056KO..W-..-..-.O	92	188
DSP1-056SO..W-..-..-.O	127	223
DSP1-056MO..W-..-..-.O	162	258

Toleranzangabe der Passfeder und Passfedernut nach DIN 6885-1
tolerance specification of the key and keyway acc. to DIN 6885-1

Technische Änderungen vorbehalten
Subject to technical change

VersionIM B5

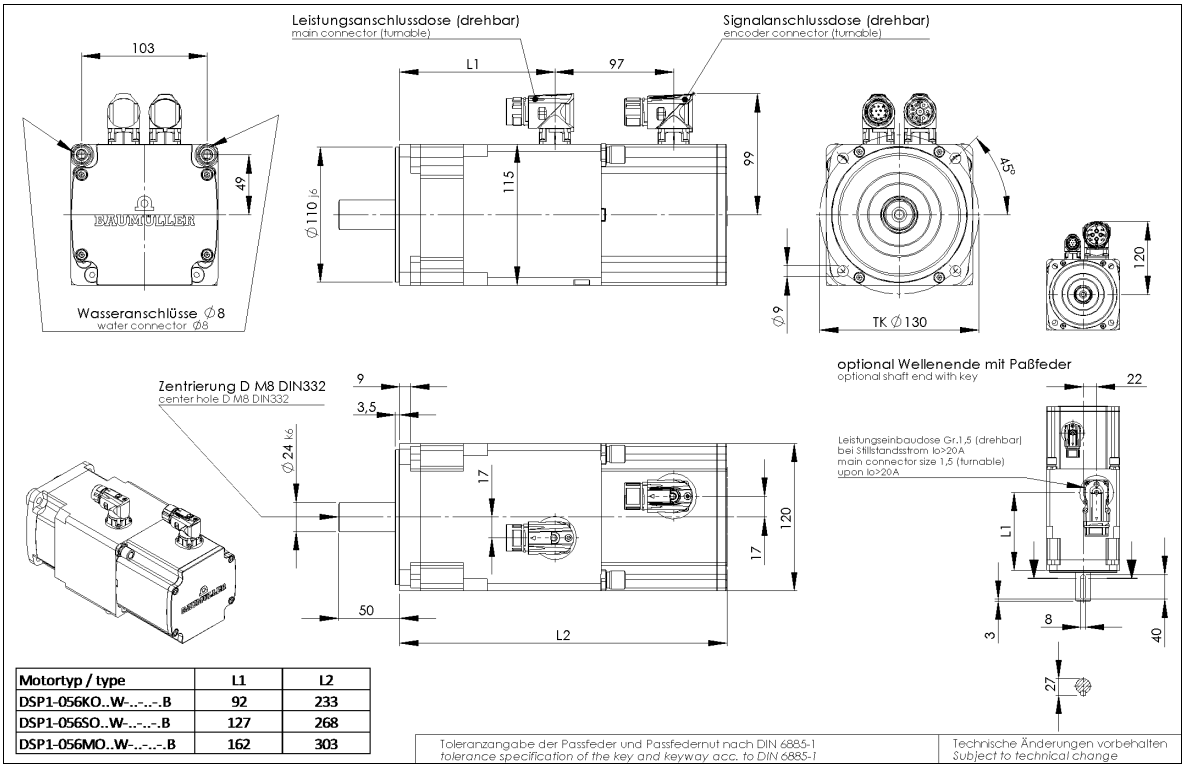

Motortyp / type	L1	L2
DSP1-056KO..W-..-..-.B	92	233
DSP1-056SO..W-..-..-.B	127	268
DSP1-056MO..W-..-..-.B	162	303

Toleranzangabe der Passfeder und Passfedernut nach DIN 6885-1
tolerance specification of the key and keyway acc. to DIN 6885-1

Technische Änderungen vorbehalten
Subject to technical change

4.3. Dimension drawings DSP1-071

Dimension drawing DSP1-071….U-..-..-.O.- PP-.-..-O-000
Version IM B5

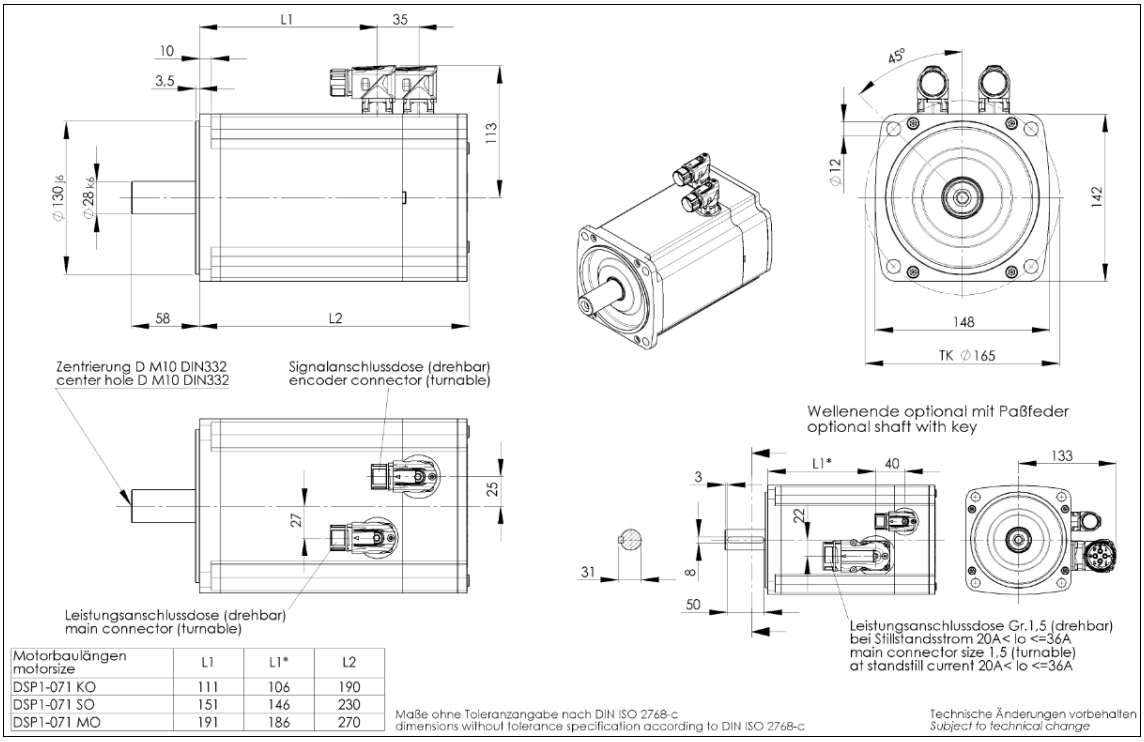

Motorbaulängen motorsize	L1	L1*	L2
DSP1-071 KO	111	106	190
DSP1-071 SO	151	146	230
DSP1-071 MO	191	186	270

Dimension drawing DSP1-071….U-..-..-.B.- PP-.-..-O-000
Version IM B5

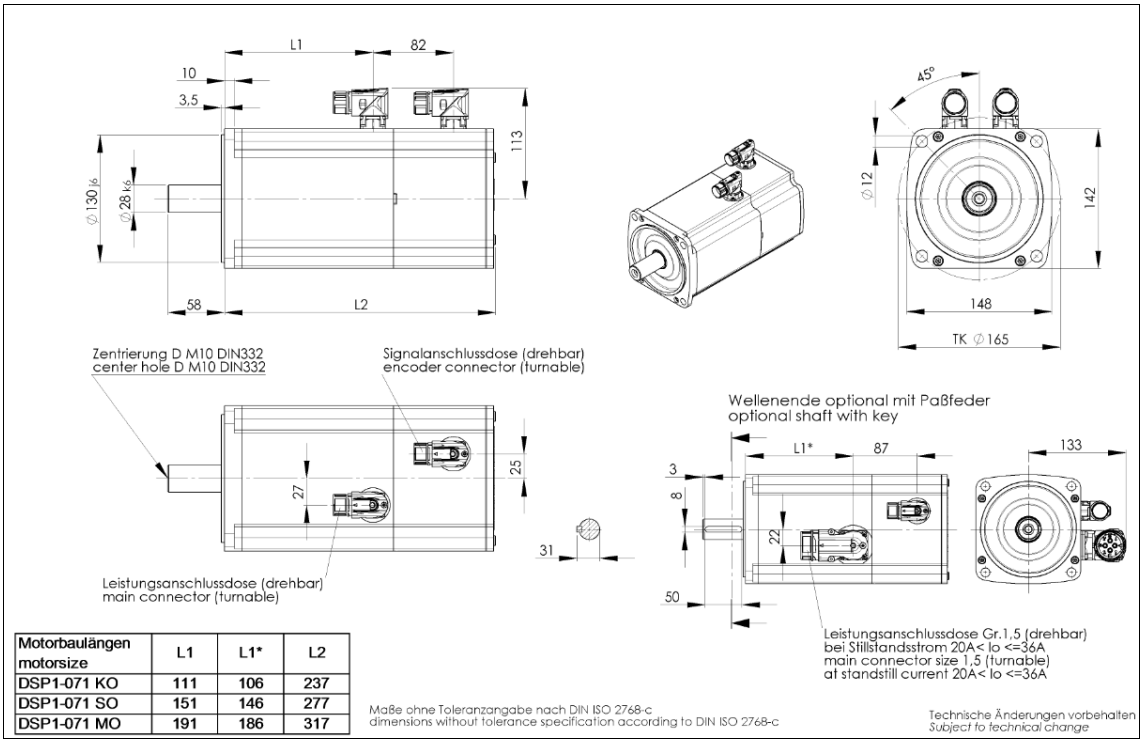

Motorbaulängen motorsize	L1	L1*	L2
DSP1-071 KO	111	106	237
DSP1-071 SO	151	146	277
DSP1-071 MO	191	186	317

Dimension drawing DSP1-071….O-..-..-.O.- PP-.-..-O-000
Version IM B5

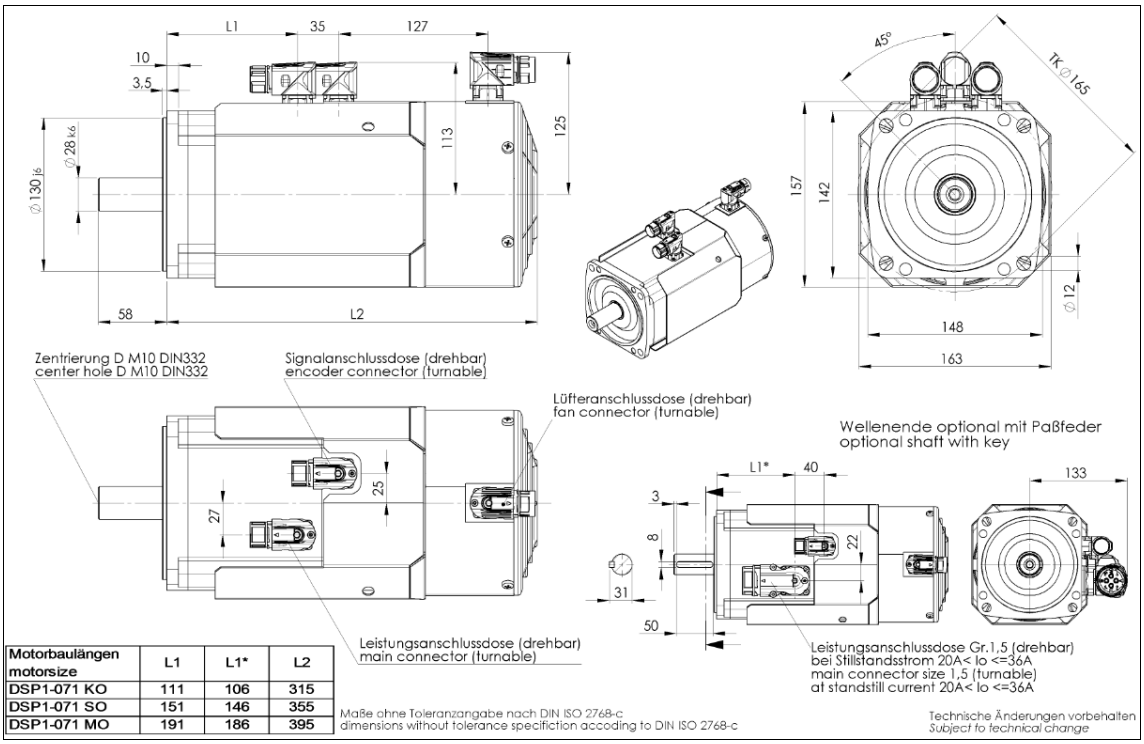

Motorbaulängen motorsize	L1	L1*	L2
DSP1-071 KO	111	106	315
DSP1-071 SO	151	146	355
DSP1-071 MO	191	186	395

Dimension drawing DSP1-071….O-..-..-.B.- PP-.-..-O-000
Version IM B5

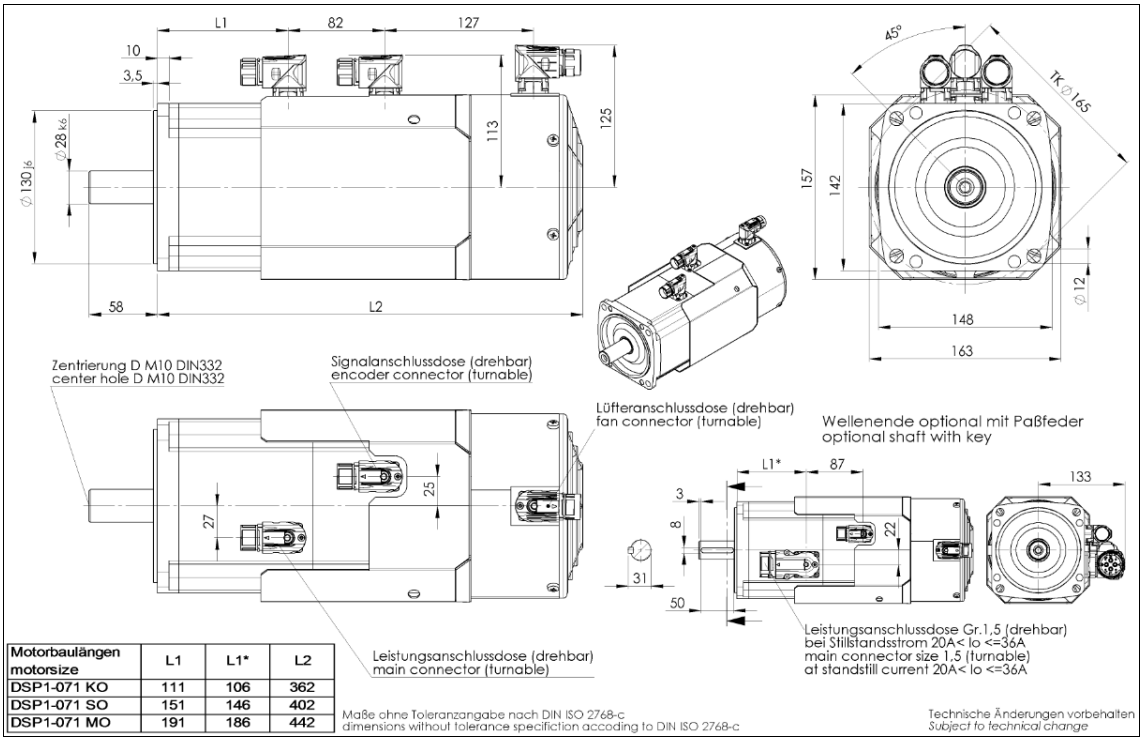

Motorbaulängen motorsize	L1	L1*	L2
DSP1-071 KO	111	106	362
DSP1-071 SO	151	146	402
DSP1-071 MO	191	186	442

Dimension drawing DSP1-071….O-..-..-.O.-KNP-.-..-O-000
Version IM B5

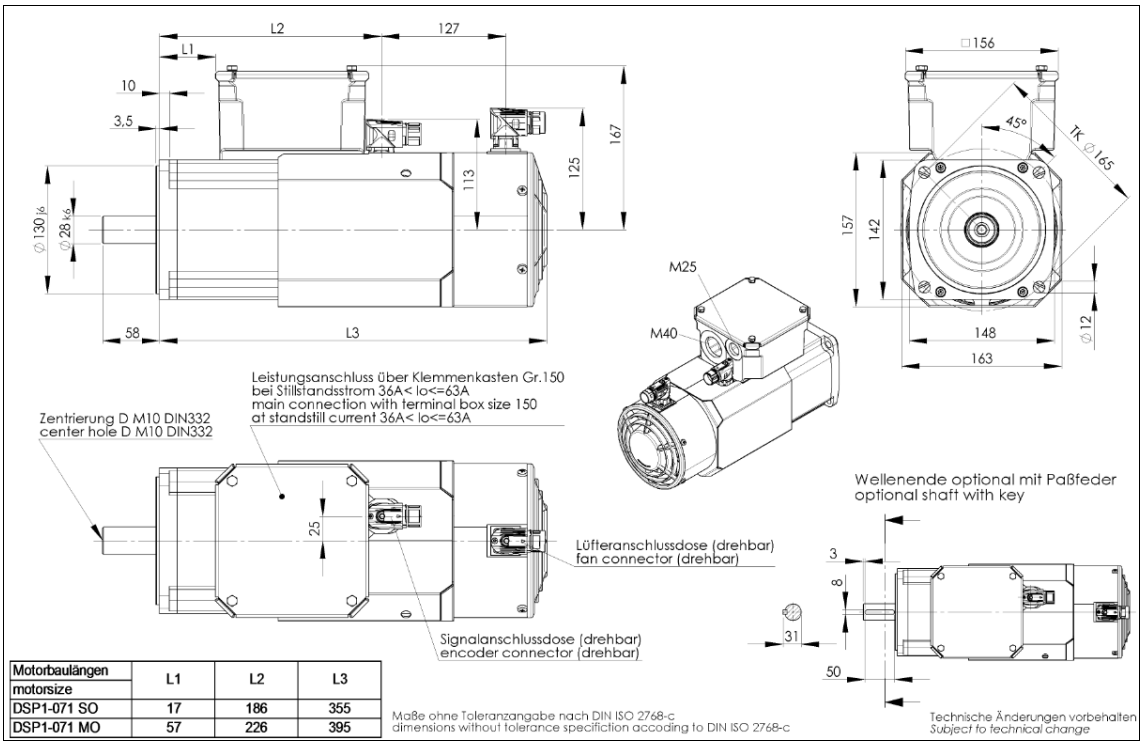

Motorbaulängen / motorsize	L1	L2	L3
DSP1-071 SO	17	186	355
DSP1-071 MO	57	226	395

Maße ohne Toleranzangabe nach DIN ISO 2768-c
dimensions without tolerance specifiction accoding to DIN ISO 2768-c

Technische Änderungen vorbehalten
Subject to technical change

Dimension drawing DSP1-071….O-..-..-.B.-KNP-.-..-O-000
Version IM B5

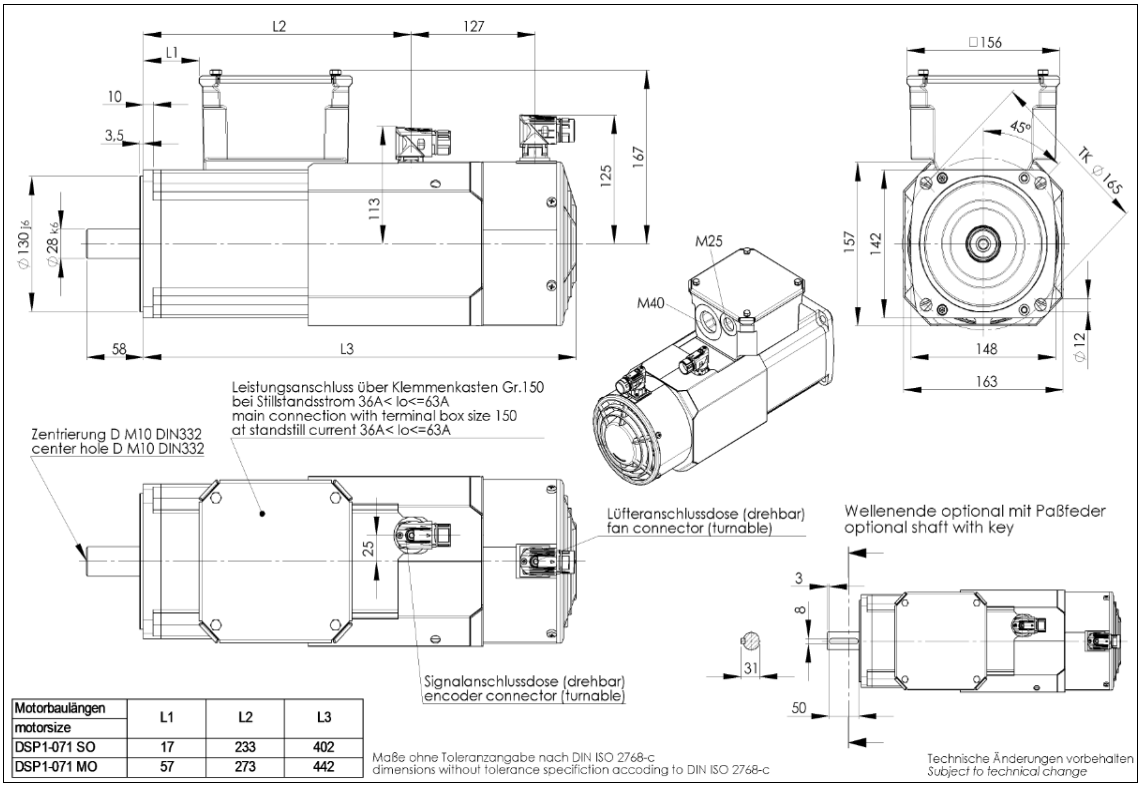

Motorbaulängen / motorsize	L1	L2	L3
DSP1-071 SO	17	233	402
DSP1-071 MO	57	273	442

Maße ohne Toleranzangabe nach DIN ISO 2768-c
dimensions without tolerance specifiction accoding to DIN ISO 2768-c

Technische Änderungen vorbehalten
Subject to technical change

Dimension drawing DSP1-071….W-..-..-.O.- PP-.-..-O-000
Version IM B5

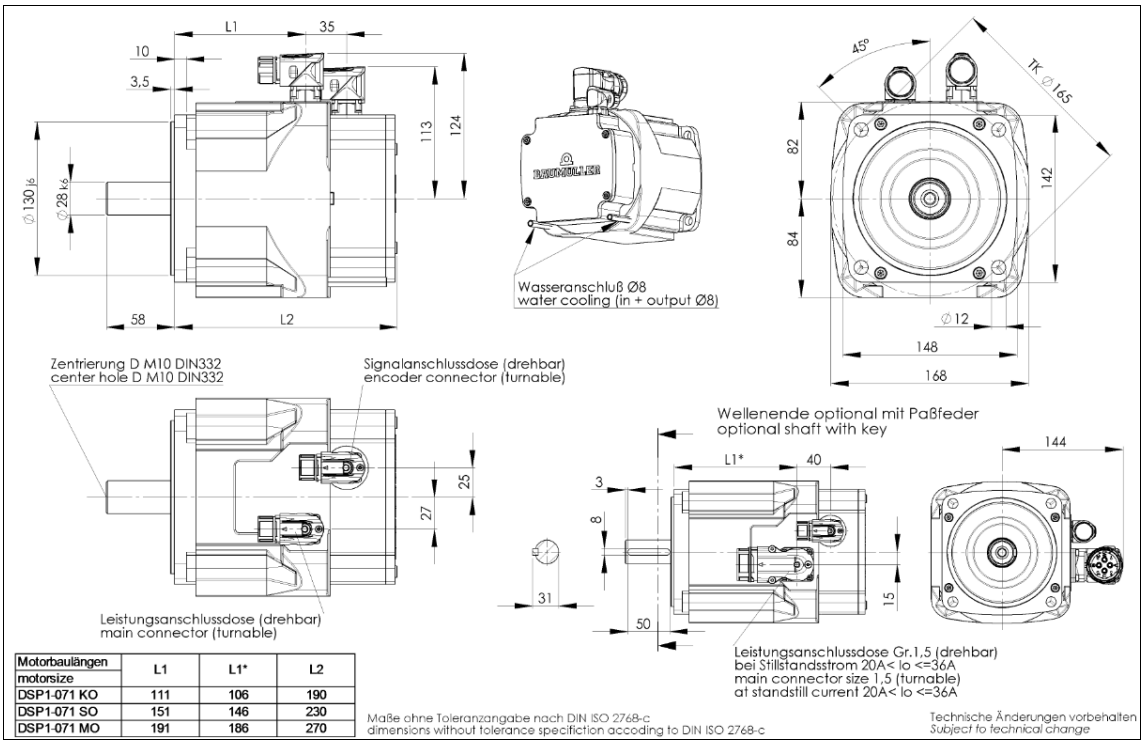

Motorbaulängen / motorsize	L1	L1*	L2
DSP1-071 KO	111	106	190
DSP1-071 SO	151	146	230
DSP1-071 MO	191	186	270

Dimension drawing DSP1-071….W-..-..-.B.- PP-.-..-O-000
Version IM B5

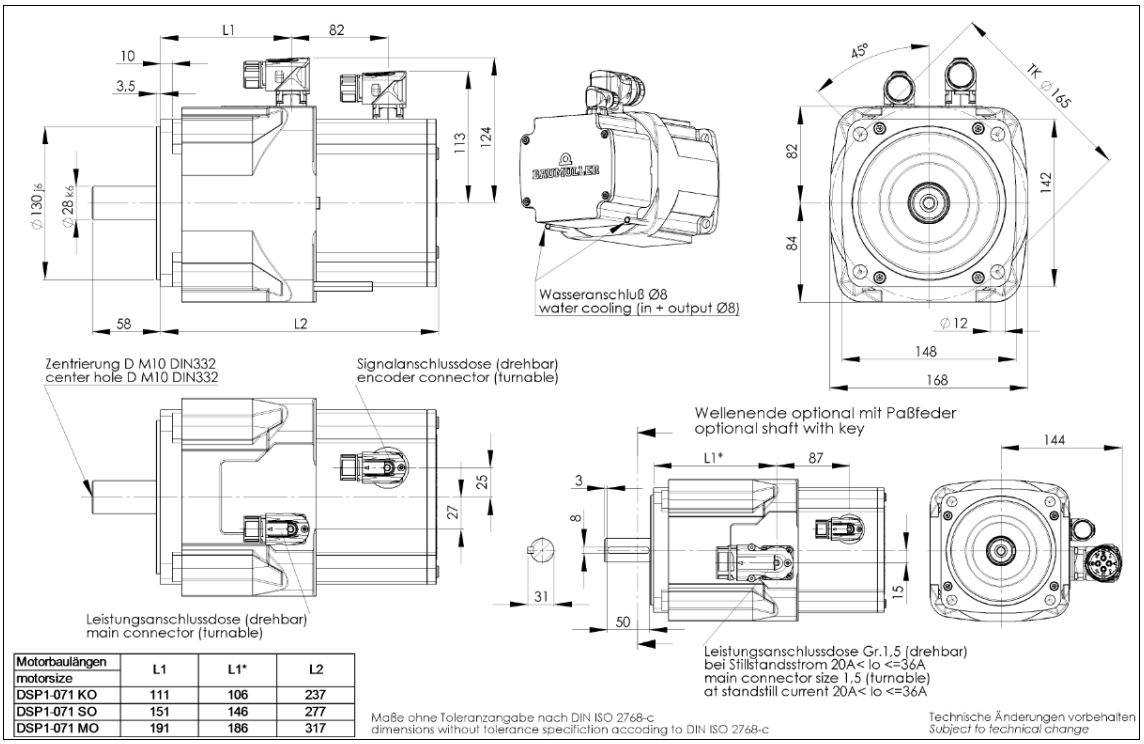

Motorbaulängen / motorsize	L1	L1*	L2
DSP1-071 KO	111	106	237
DSP1-071 SO	151	146	277
DSP1-071 MO	191	186	317

Dimension drawing DSP1-071….W-..-..-.O.-KNP-.-..-O-000
Version IM B5

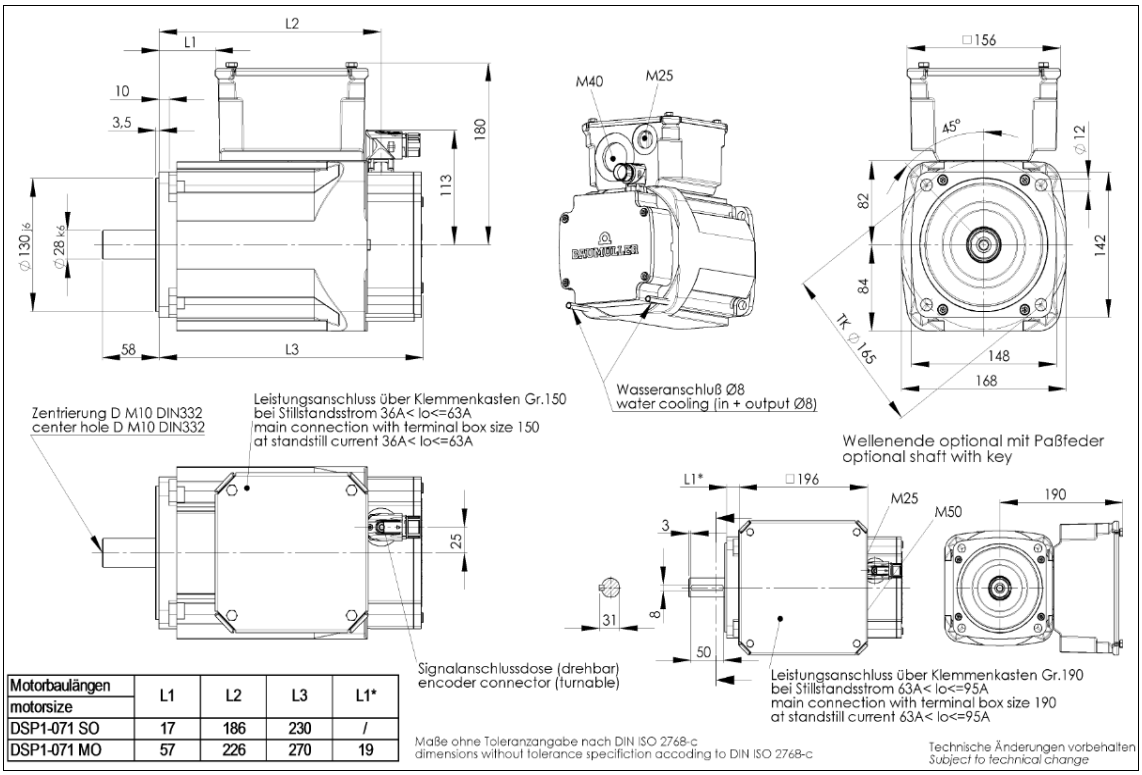

Motorbaulängen / motorsize	L1	L2	L3	L1*
DSP1-071 SO	17	186	230	/
DSP1-071 MO	57	226	270	19

Dimension drawing DSP1-071….W-..-..-.B.-KNP-.-..-O-000
Version IM B5

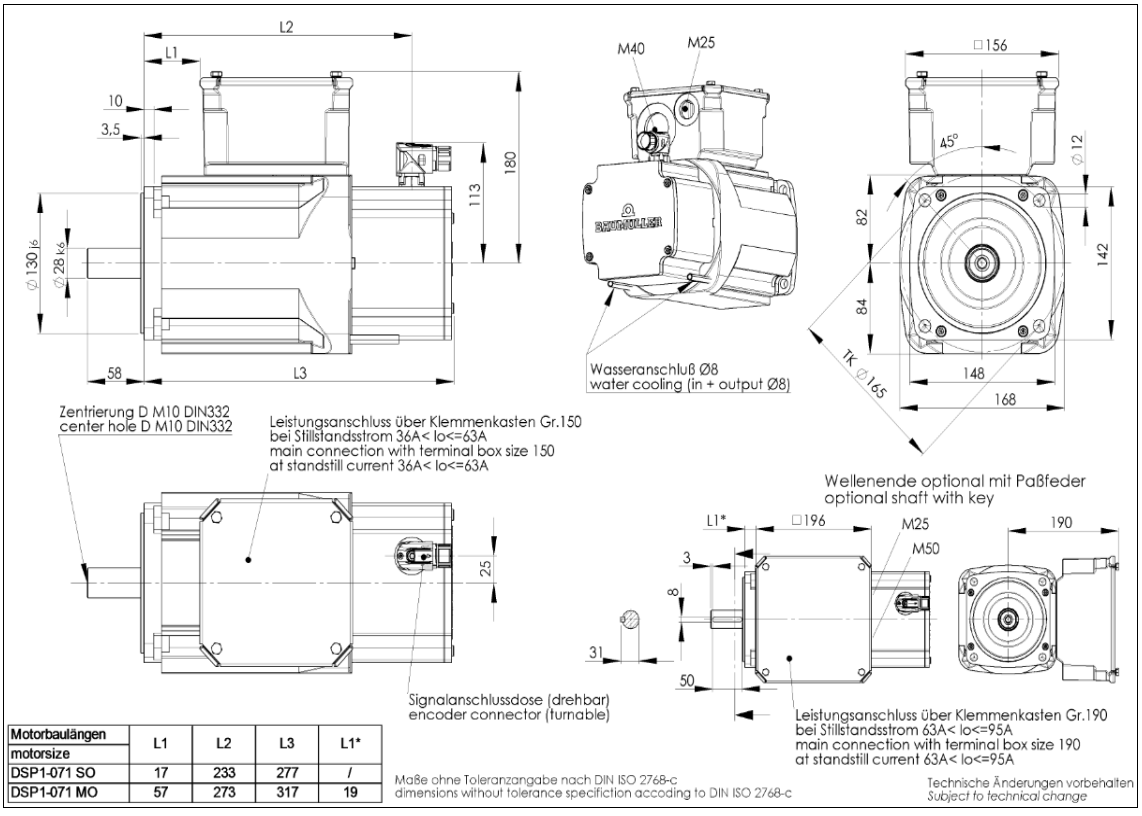

Motorbaulängen / motorsize	L1	L2	L3	L1*
DSP1-071 SO	17	233	277	/
DSP1-071 MO	57	273	317	19

4.4. Dimension drawings DSP1-100

Dimension drawing DSP1-100….U-..-..-.O.- PP-.-..-O-000
Version IM B5

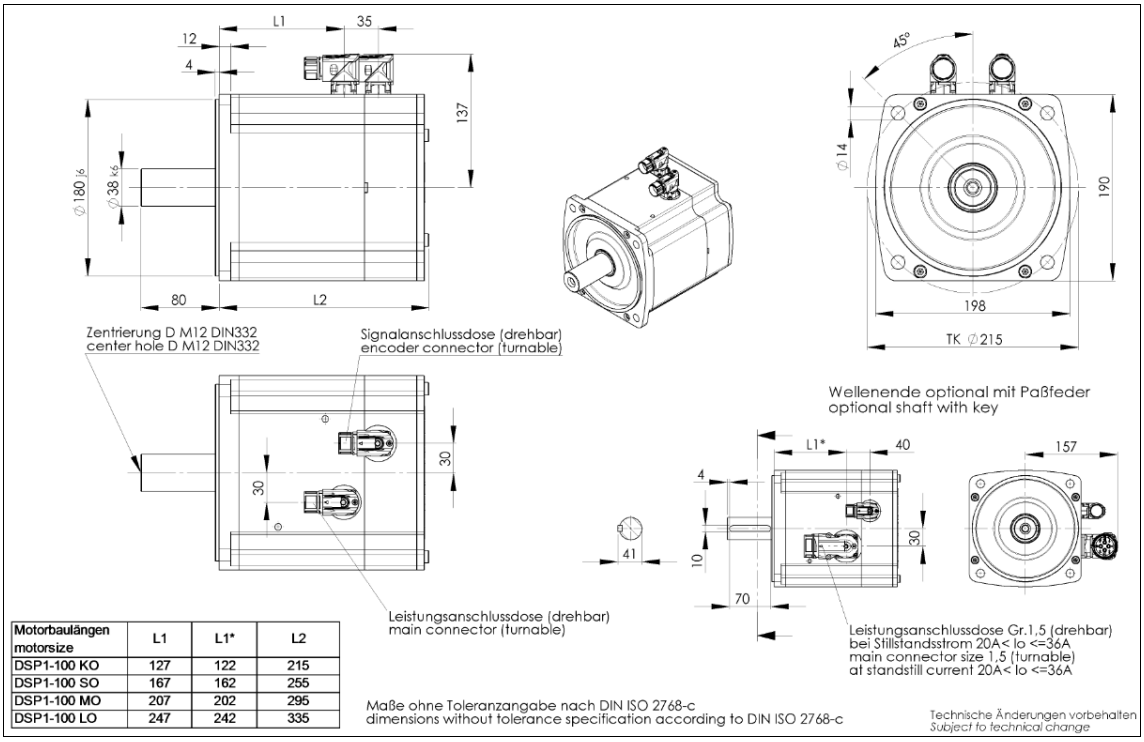

Motorbaulängen motorsize	L1	L1*	L2
DSP1-100 KO	127	122	215
DSP1-100 SO	167	162	255
DSP1-100 MO	207	202	295
DSP1-100 LO	247	242	335

Dimension drawing DSP1-100….U-..-..-.B.- PP-.-..-O-000
Version IM B5

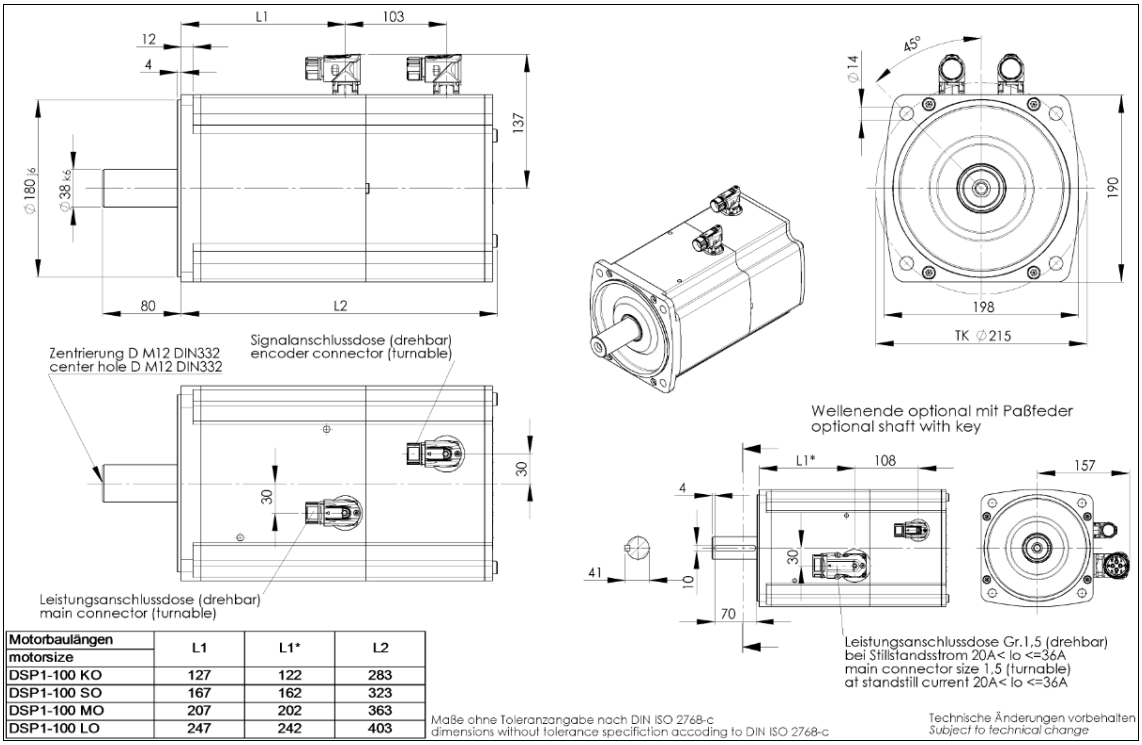

Motorbaulängen motorsize	L1	L1*	L2
DSP1-100 KO	127	122	283
DSP1-100 SO	167	162	323
DSP1-100 MO	207	202	363
DSP1-100 LO	247	242	403

Dimension drawing DSP1-100….U-..-..-.O.-KNP-.-..-O-000
Version IM B5

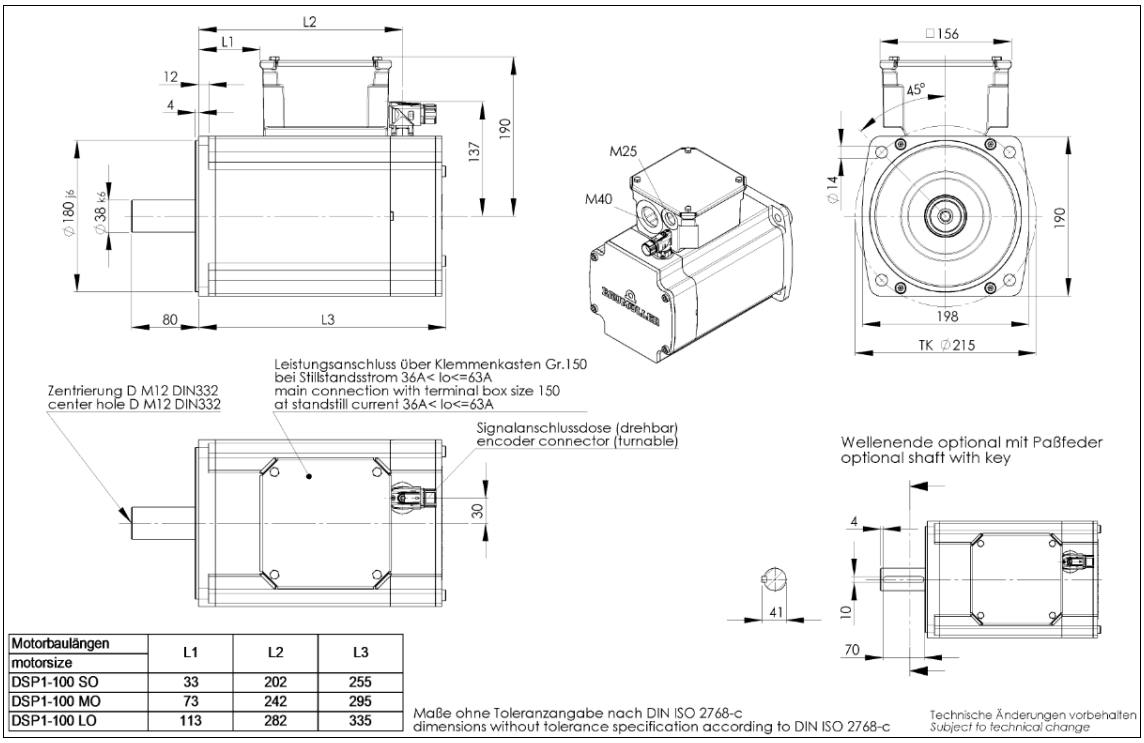

Motorbaulängen / motorsize	L1	L2	L3
DSP1-100 SO	33	202	255
DSP1-100 MO	73	242	295
DSP1-100 LO	113	282	335

Maße ohne Toleranzangabe nach DIN ISO 2768-c
dimensions without tolerance specification according to DIN ISO 2768-c

Technische Änderungen vorbehalten
Subject to technical change

Dimension drawing DSP1-100….U-..-..-.B.-KNP-.-..-O-000
Version IM B5

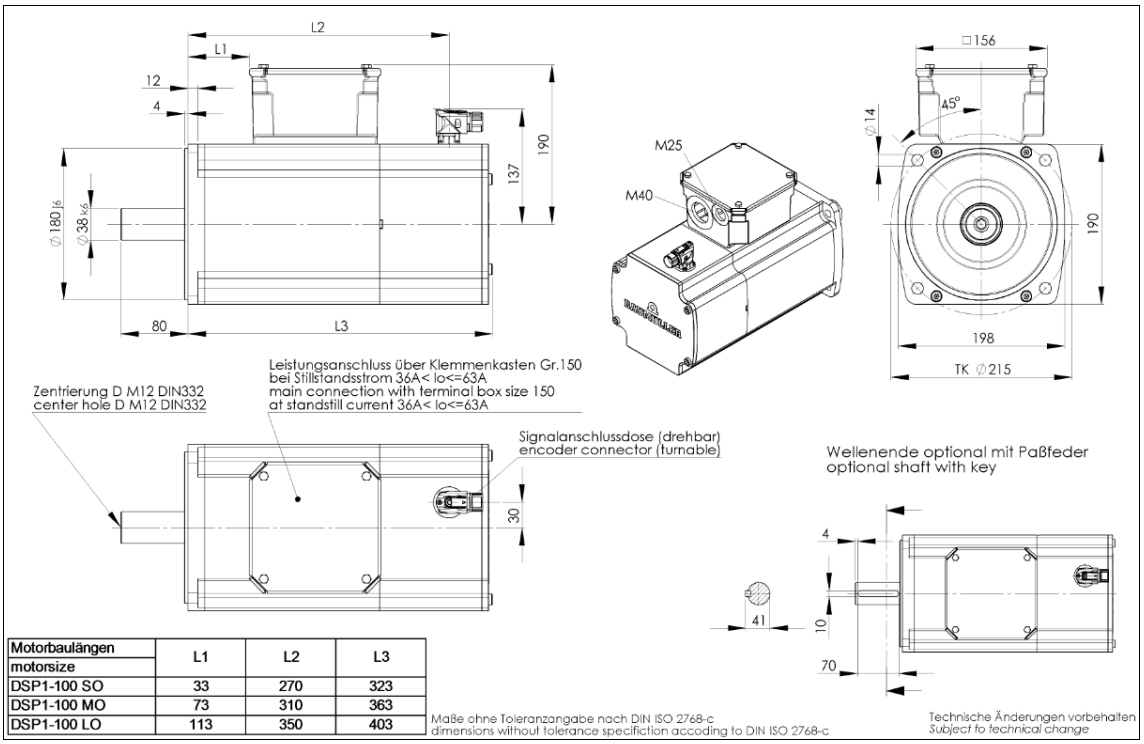

Motorbaulängen / motorsize	L1	L2	L3
DSP1-100 SO	33	270	323
DSP1-100 MO	73	310	363
DSP1-100 LO	113	350	403

Maße ohne Toleranzangabe nach DIN ISO 2768-c
dimensions without tolerance specifiction accoding to DIN ISO 2768-c

Technische Änderungen vorbehalten
Subject to technical change

Dimension drawing DSP1-100….O-..-..-.O.- PP-.-..-O-000
Version IM B5

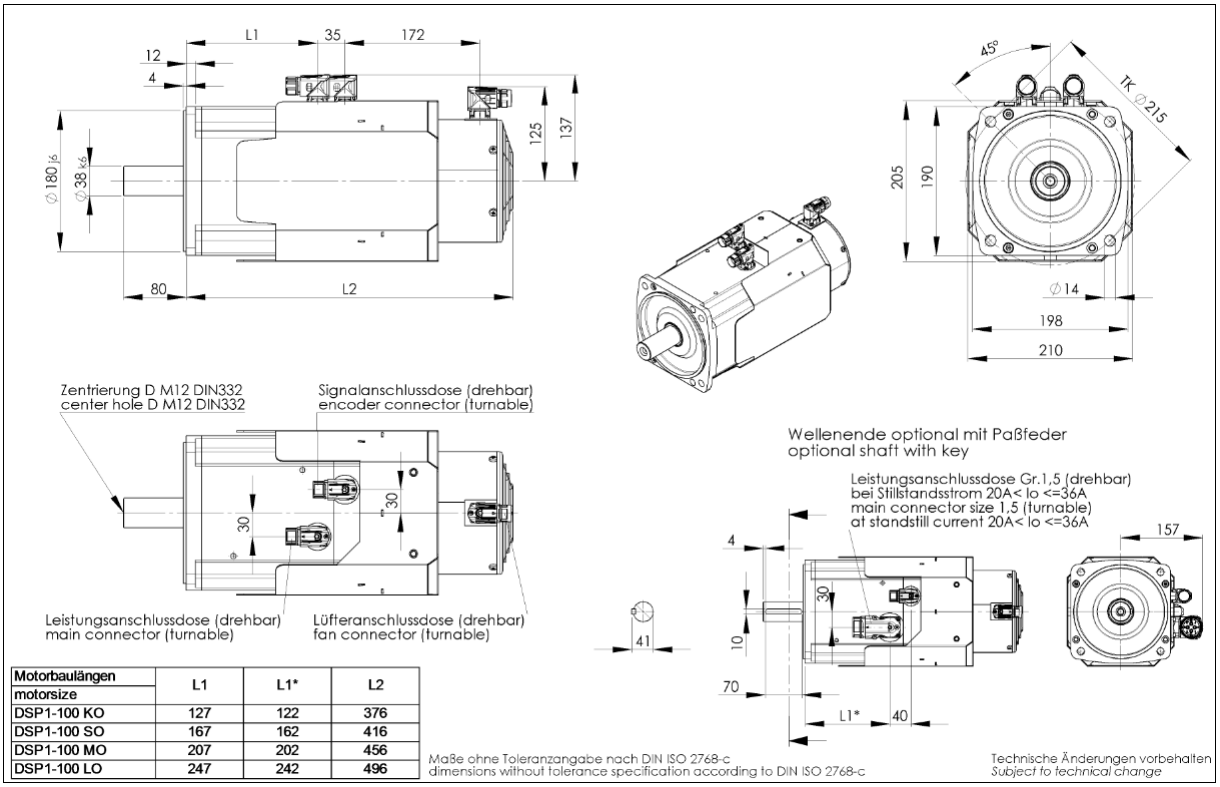

Motorbaulängen / motorsize	L1	L1*	L2
DSP1-100 KO	127	122	376
DSP1-100 SO	167	162	416
DSP1-100 MO	207	202	456
DSP1-100 LO	247	242	496

Maße ohne Toleranzangabe nach DIN ISO 2768-c
dimensions without tolerance specification according to DIN ISO 2768-c

Technische Änderungen vorbehalten
Subject to technical change

Dimension drawing DSP1-100….O-..-..-.B.- PP-.-..-O-000
Version IM B5

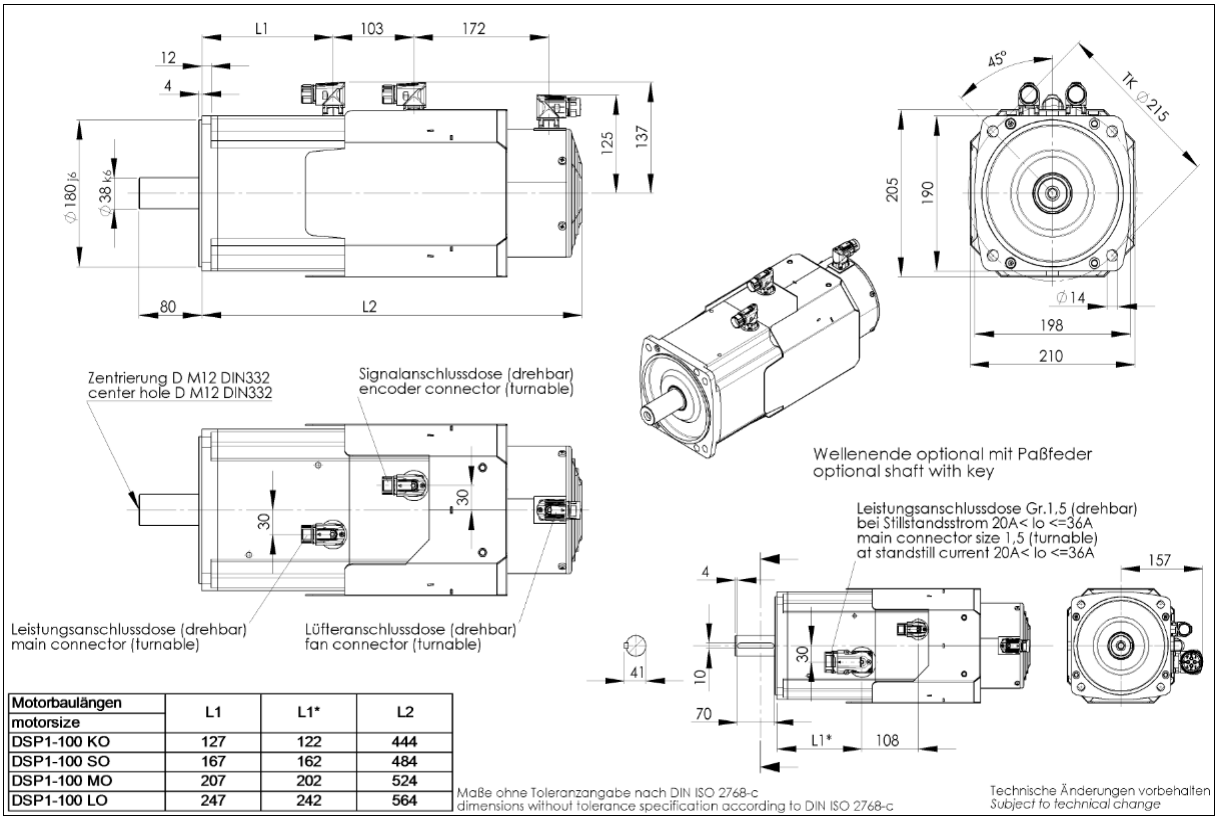

Motorbaulängen / motorsize	L1	L1*	L2
DSP1-100 KO	127	122	444
DSP1-100 SO	167	162	484
DSP1-100 MO	207	202	524
DSP1-100 LO	247	242	564

Maße ohne Toleranzangabe nach DIN ISO 2768-c
dimensions without tolerance specification according to DIN ISO 2768-c

Technische Änderungen vorbehalten
Subject to technical change

Dimension drawing DSP1-100….O-..-..-.O.-KNP-.-..-O-000
Version IM B5

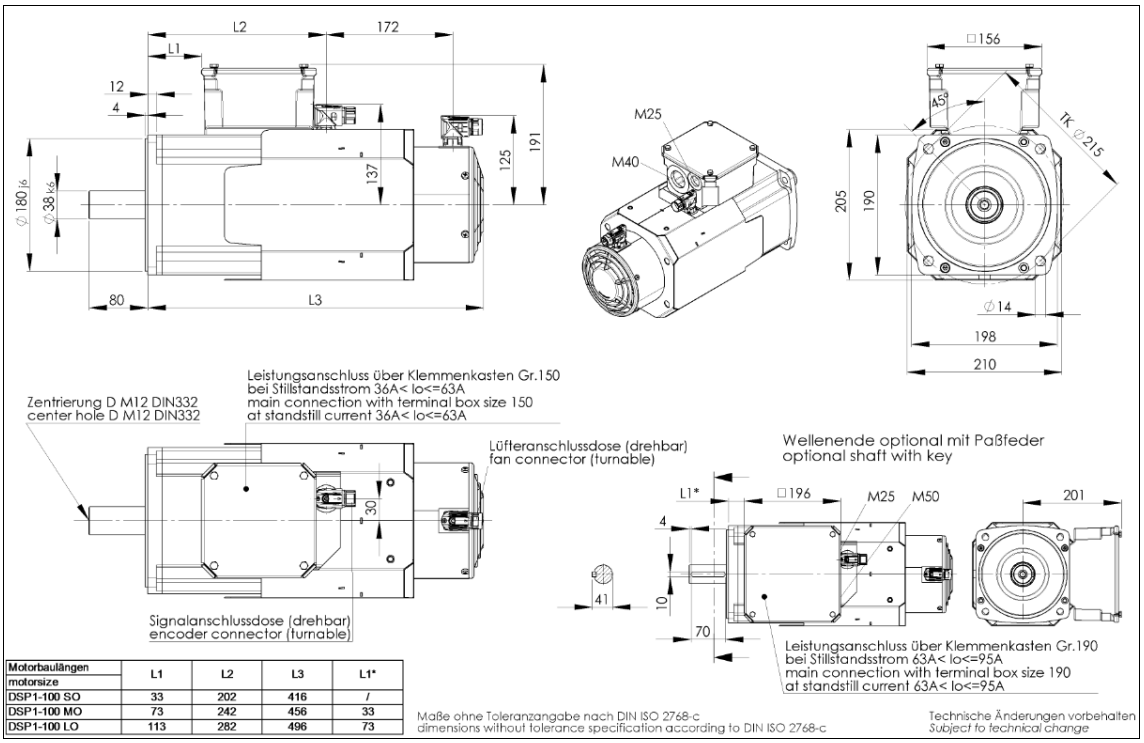

Motorbaulängen / motorsize	L1	L2	L3	L1*
DSP1-100 SO	33	202	416	/
DSP1-100 MO	73	242	456	33
DSP1-100 LO	113	282	496	73

Maße ohne Toleranzangabe nach DIN ISO 2768-c
dimensions without tolerance specification according to DIN ISO 2768-c

Technische Änderungen vorbehalten
Subject to technical change

Dimension drawing DSP1-100….O-..-..-.B.-KNP-.-..-O-000
Version IM B5

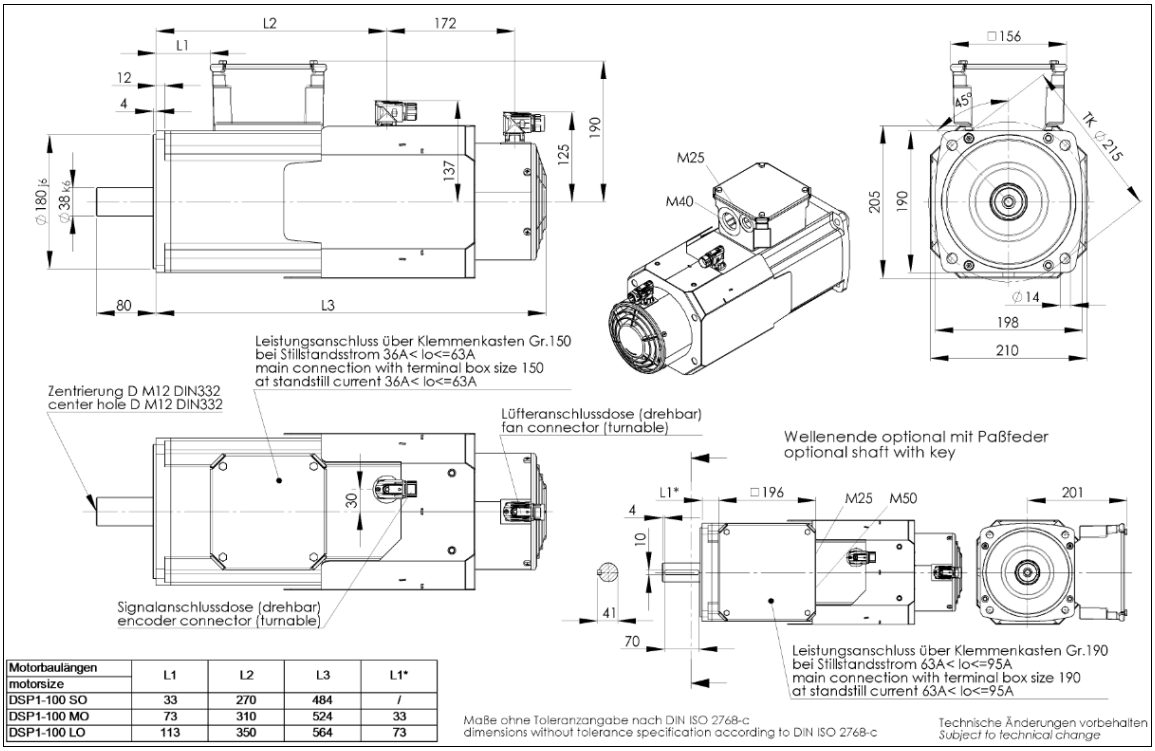

Motorbaulängen / motorsize	L1	L2	L3	L1*
DSP1-100 SO	33	270	484	/
DSP1-100 MO	73	310	524	33
DSP1-100 LO	113	350	564	73

Maße ohne Toleranzangabe nach DIN ISO 2768-c
dimensions without tolerance specification according to DIN ISO 2768-c

Technische Änderungen vorbehalten
Subject to technical change

Dimension drawing DSP1-100….W-..-..-.O.-__P-.-..-O-000
Version IM B5

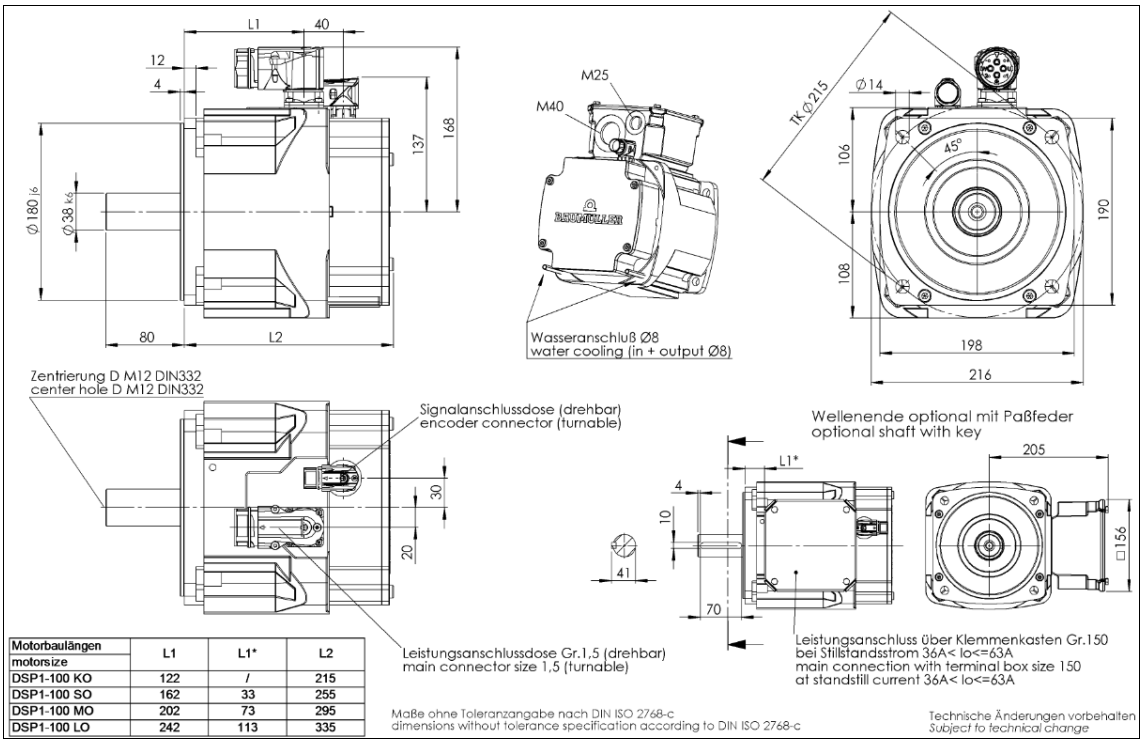

Motorbaulängen motorsize	L1	L1*	L2
DSP1-100 KO	122	/	215
DSP1-100 SO	162	33	255
DSP1-100 MO	202	73	295
DSP1-100 LO	242	113	335

Dimension drawing DSP1-100….W-..-..-.B.-__P-.-..-O-000
Version IM B5

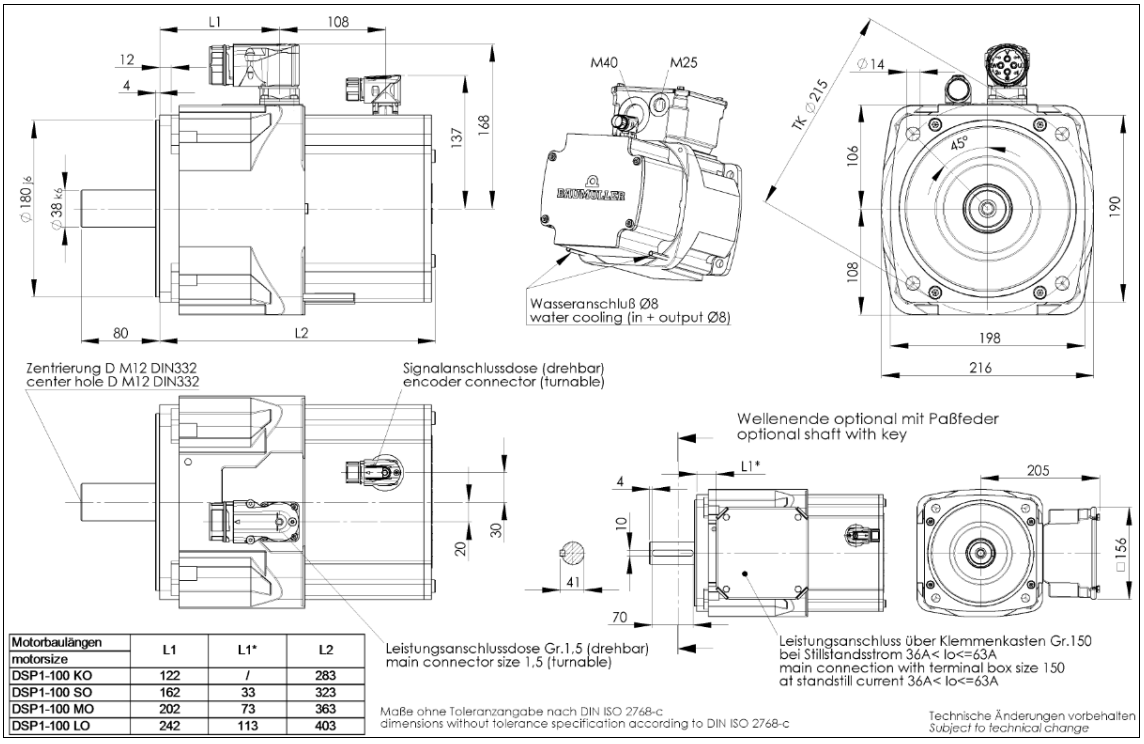

Motorbaulängen motorsize	L1	L1*	L2
DSP1-100 KO	122	/	283
DSP1-100 SO	162	33	323
DSP1-100 MO	202	73	363
DSP1-100 LO	242	113	403

Dimension drawing DSP1-100….W-..-..-.O.-KNP-.-..-O-000
Version IM B5

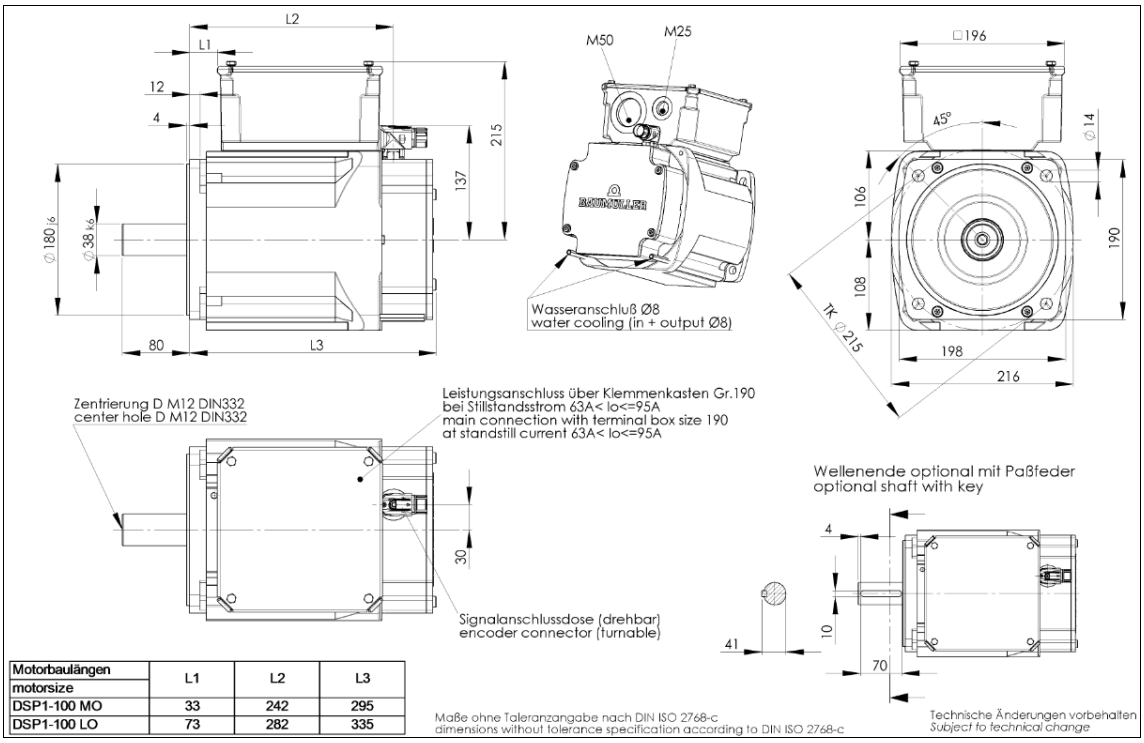

Motorbaulängen / motorsize	L1	L2	L3
DSP1-100 MO	33	242	295
DSP1-100 LO	73	282	335

Maße ohne Taleranzangabe nach DIN ISO 2768-c
dimensions without tolerance specification according to DIN ISO 2768-c

Technische Änderungen vorbehalten
Subject to technical change

Dimension drawing DSP1-100….W-..-..-.B.-KNP-.-..-O-000
Version IM B5

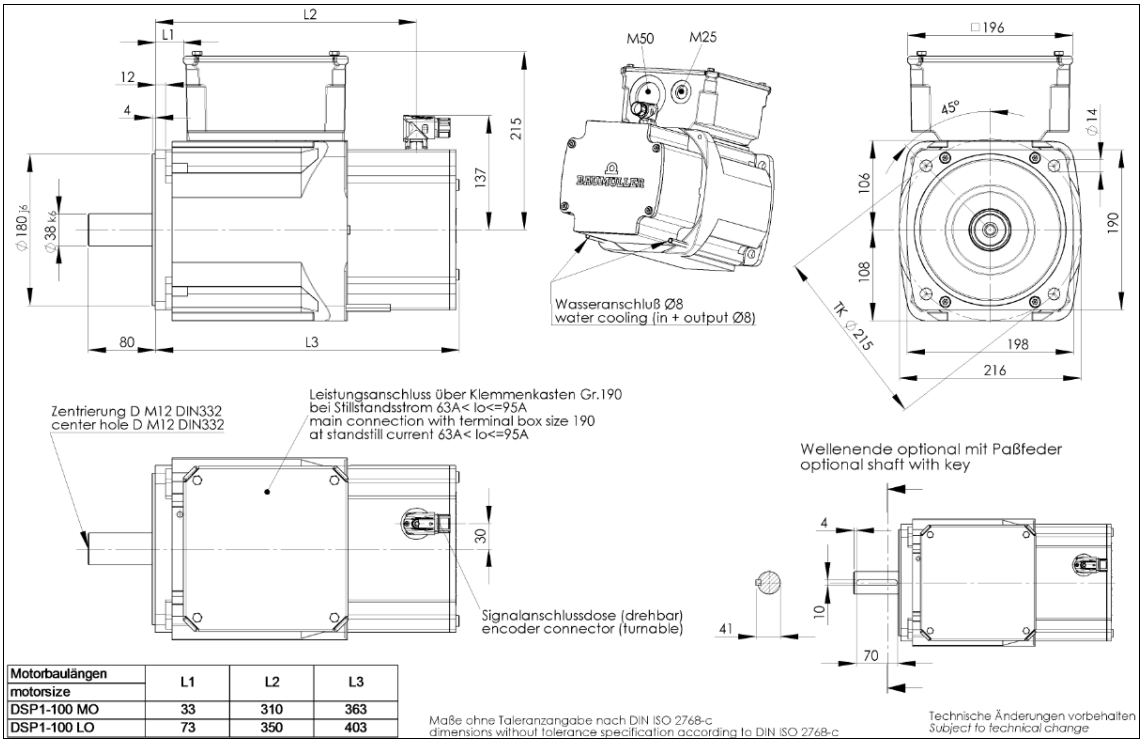

Motorbaulängen / motorsize	L1	L2	L3
DSP1-100 MO	33	310	363
DSP1-100 LO	73	350	403

Maße ohne Taleranzangabe nach DIN ISO 2768-c
dimensions without tolerance specification according to DIN ISO 2768-c

Technische Änderungen vorbehalten
Subject to technical change

4.5. Terminal box dimensions

In a I_0 > 36 A. a terminal box must be used.

If 63 A > I_0 > 36 A. the following terminal box must be used. The outflow direction of the main connection is toward the N side.

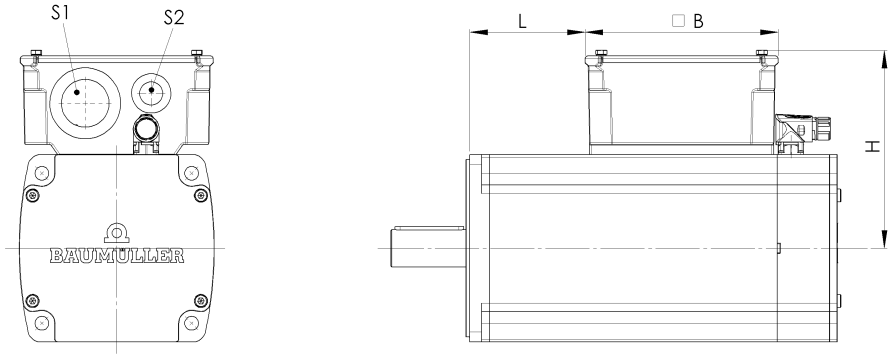

Motor length	L	B	H	S1	S2	I_0
DSP1-071SO	17	156	170	M40	M25	≤ 63 A
DSP1-071MO	57	156	170	M40	M25	≤ 63 A

DSP1-100KO	/	156	205	M50	M25	≤ 63 A
DSP1-100SO	33	156	205	M50	M25	≤ 63 A
DSP1-100MO	73	156	205	M50	M25	≤ 63 A
DSP1-100LO	113	156	205	M50	M25	≤ 63 A

In a motor with I_0 > 63 A. the following terminal box must be used. The outflow direction of the main connection is toward the N side.

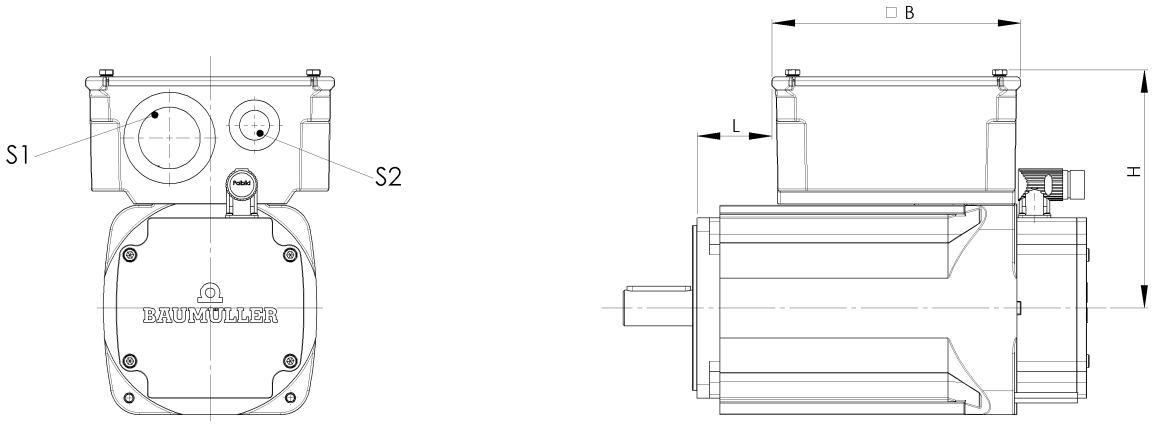

Motor length	L	B	H	S1	S2	I_0
DSP1-071MO	59	196	190	M50	M25	≤ 95 A

Motor length	L	B	H	S1	S2	I_0
DSP1-100SO	/	196	190	M50	M25	≤ 95 A
DSP1-100MO	33	196	190	M50	M25	≤ 95 A
DSP1-100LO	73	196	190	M50	M25	≤ 95 A

5. Motor characteristic curves

Definition

Cold motor	Environmental temperature (0°C to 40°C)
Motor at operating temperature	Continuous operation (S1) with nominal data of the motor --> Environmental temperature + Delta heating (105K)

5.1. Characteristic curves DSP1-045

5.1.1. DSP1-045..64U-.. (without fan)

DSP1-045KO64U-60-54

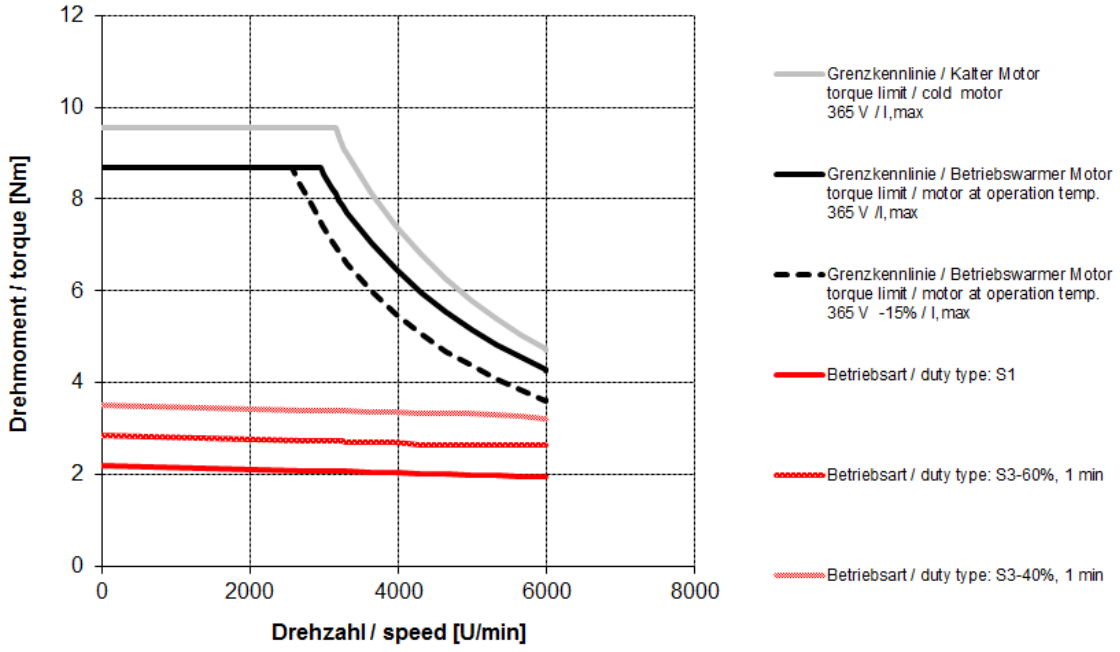

DSP1-045SO64U-60-54

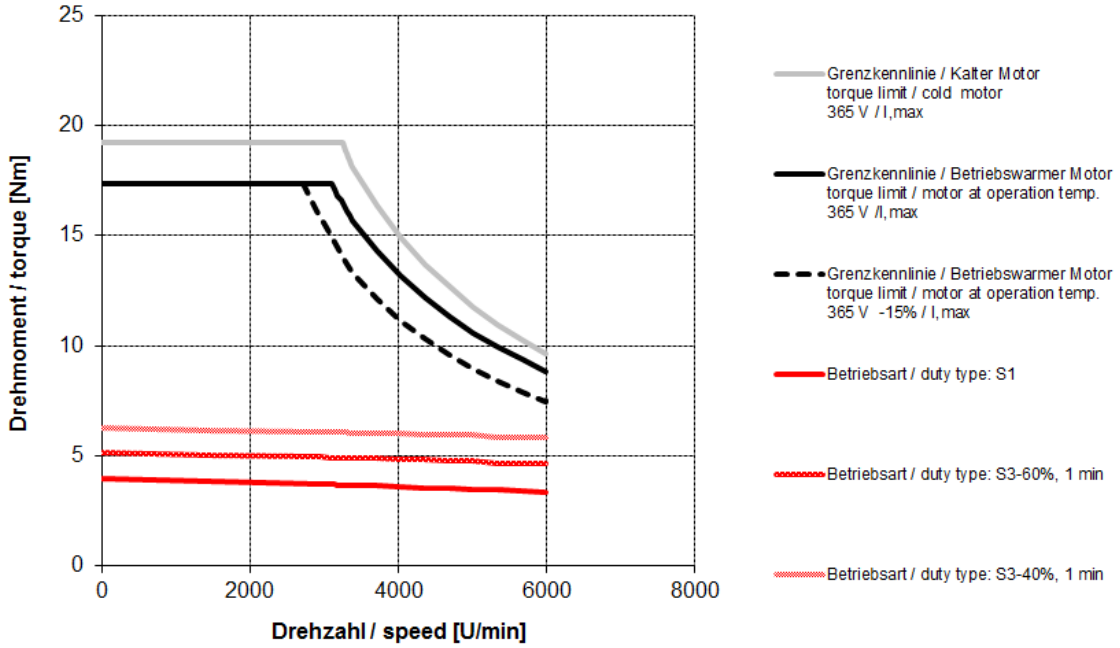

DSP1-045MO64U-60-54

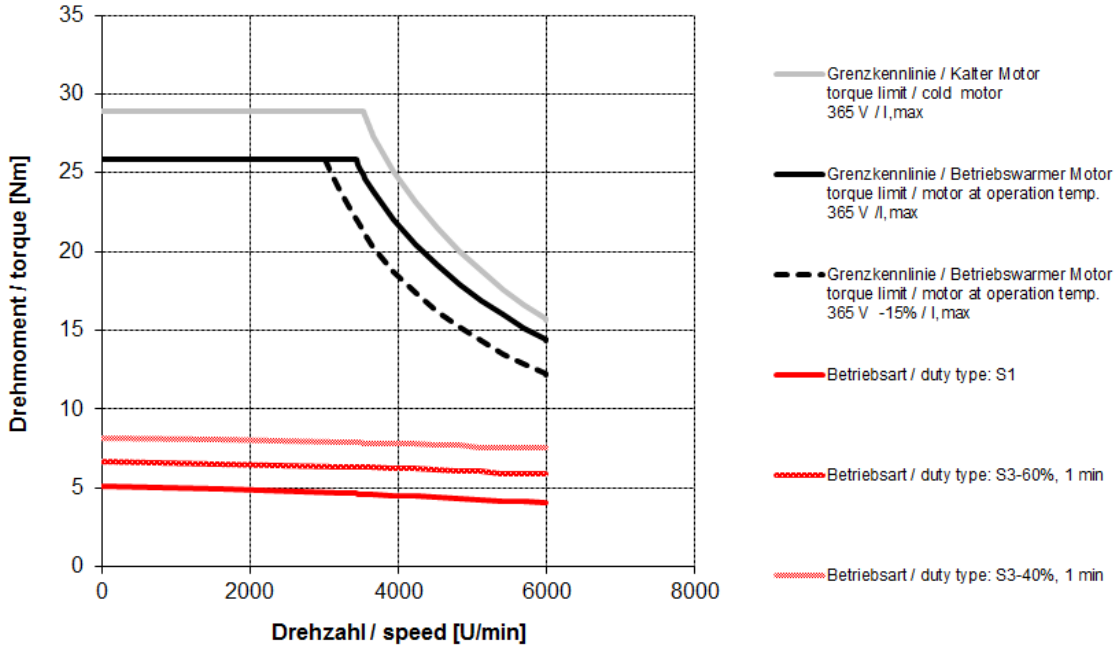

5.1.2. DSP1-045..64W-.. (water cooled)

DSP1-045KO64W-60-54

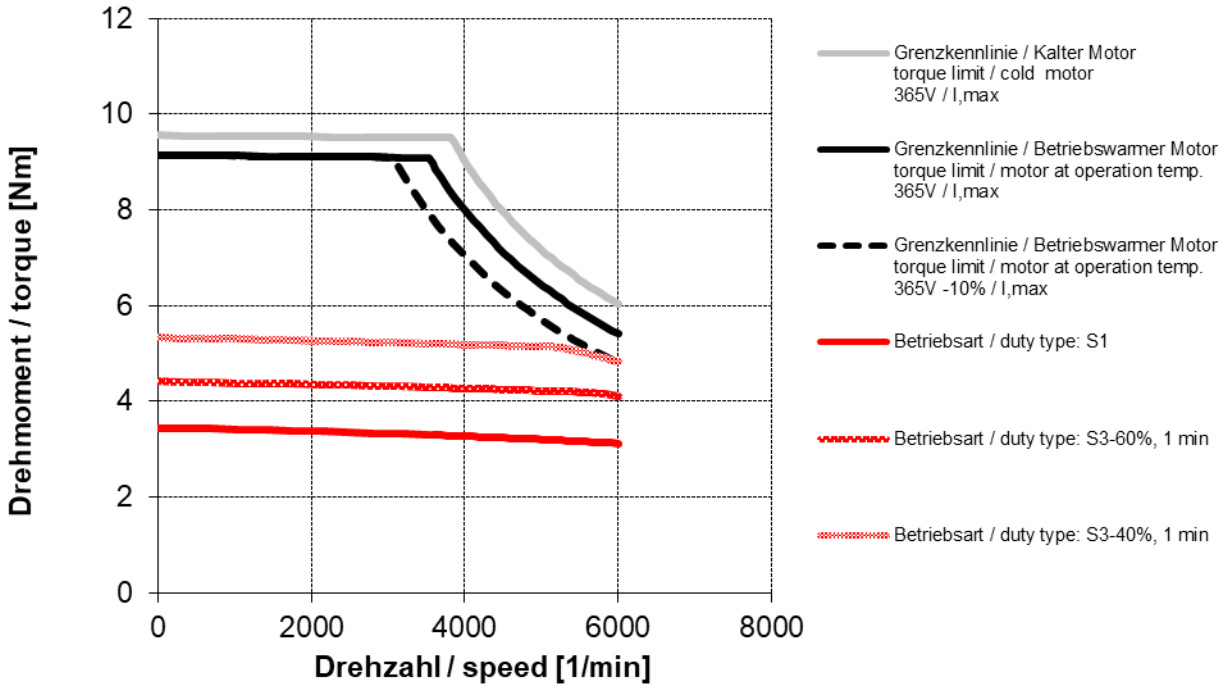

DSP1-045SO64W-60-54

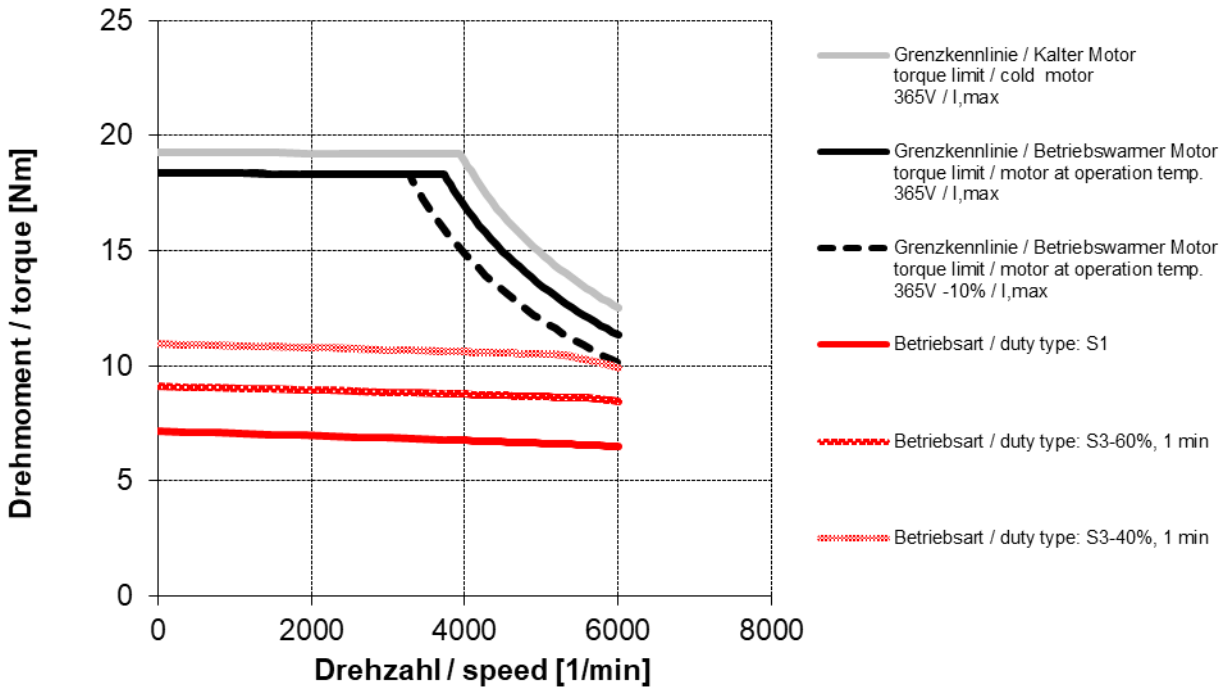

DSP1-045MO64W-60-54

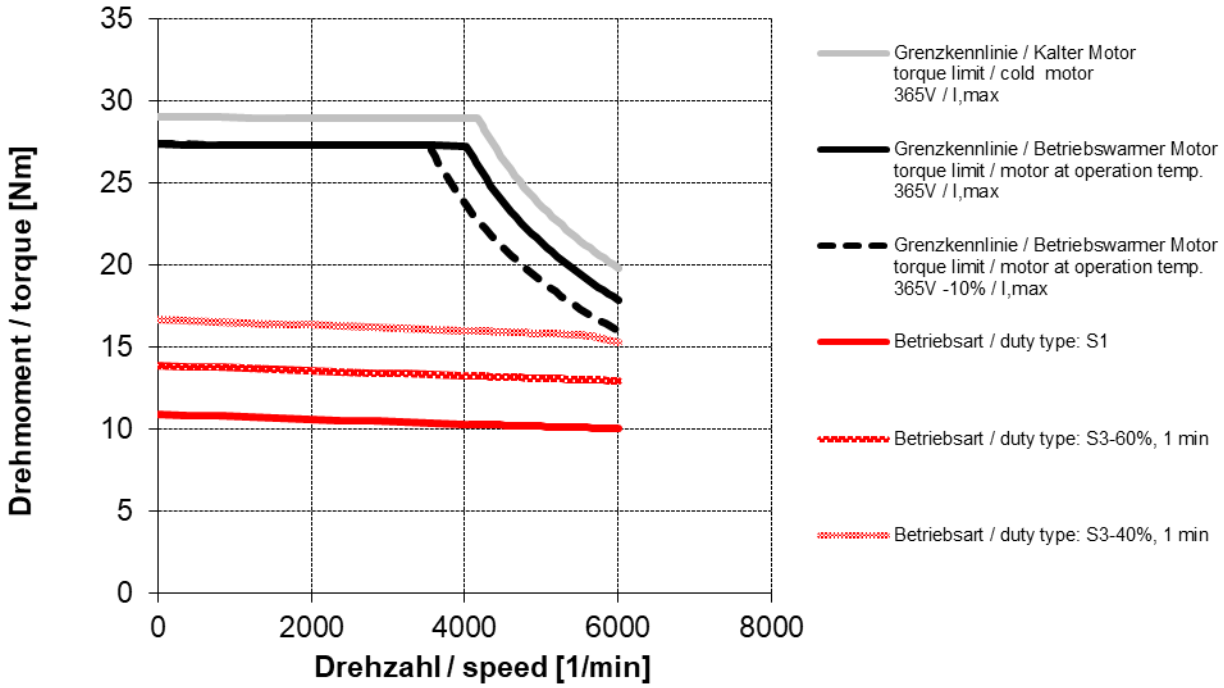

5.2. Characteristic curves DSP1-056

5.2.1. DSP1-056..64U-.. (without fan)

DSP1-056KO64U-60-54

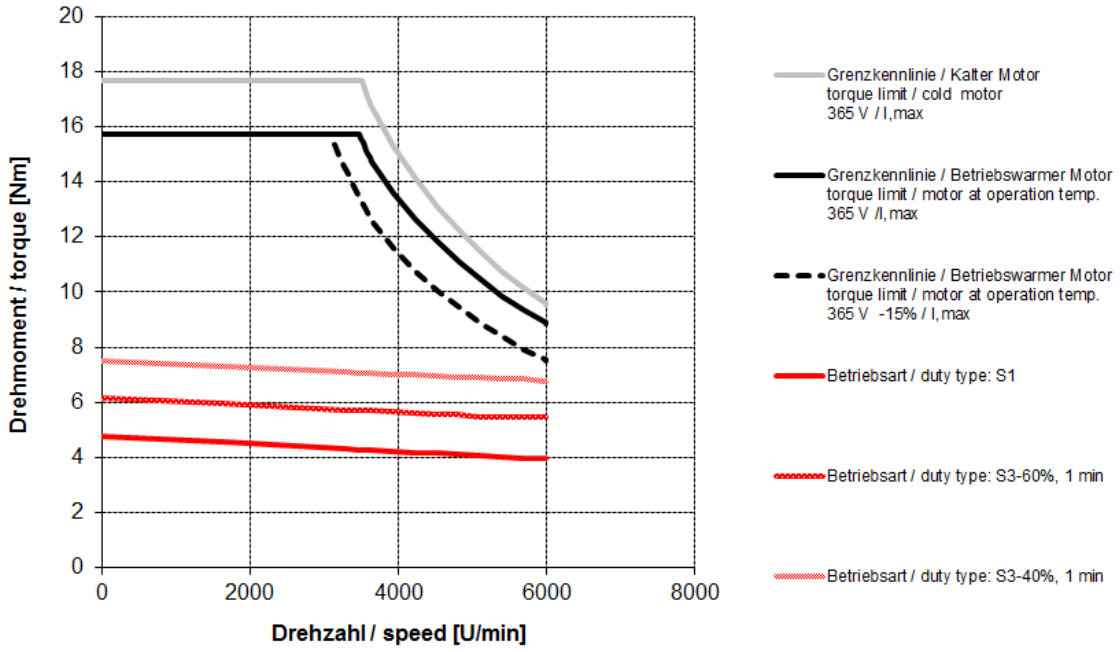

DSP1-056SO64U-60-54

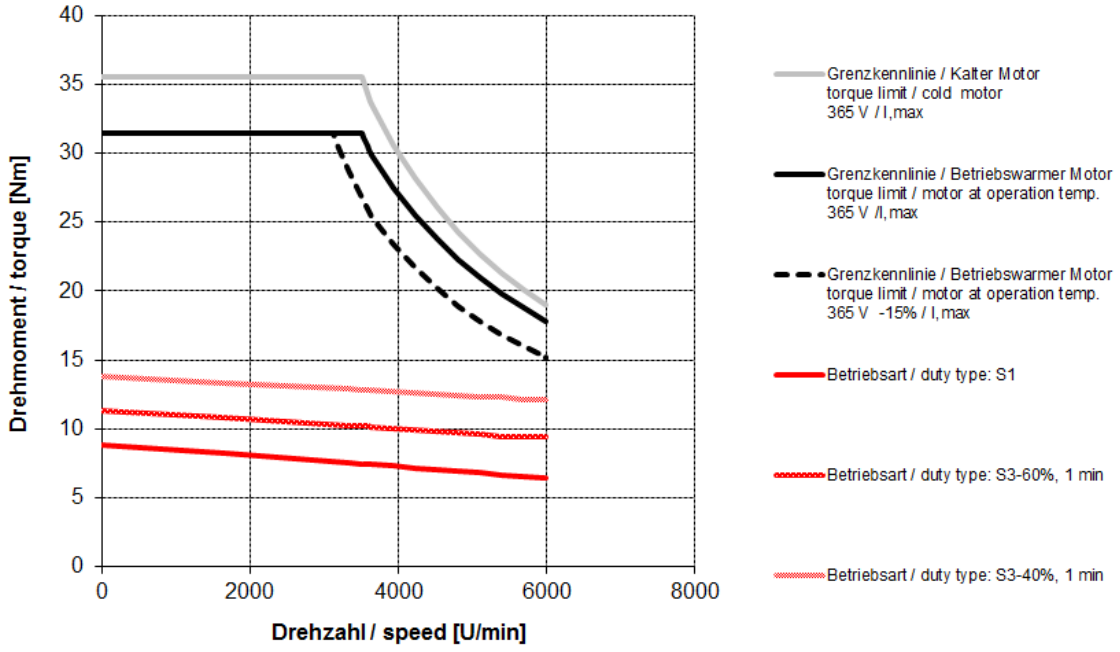

DSP1-056MO64U-40-54

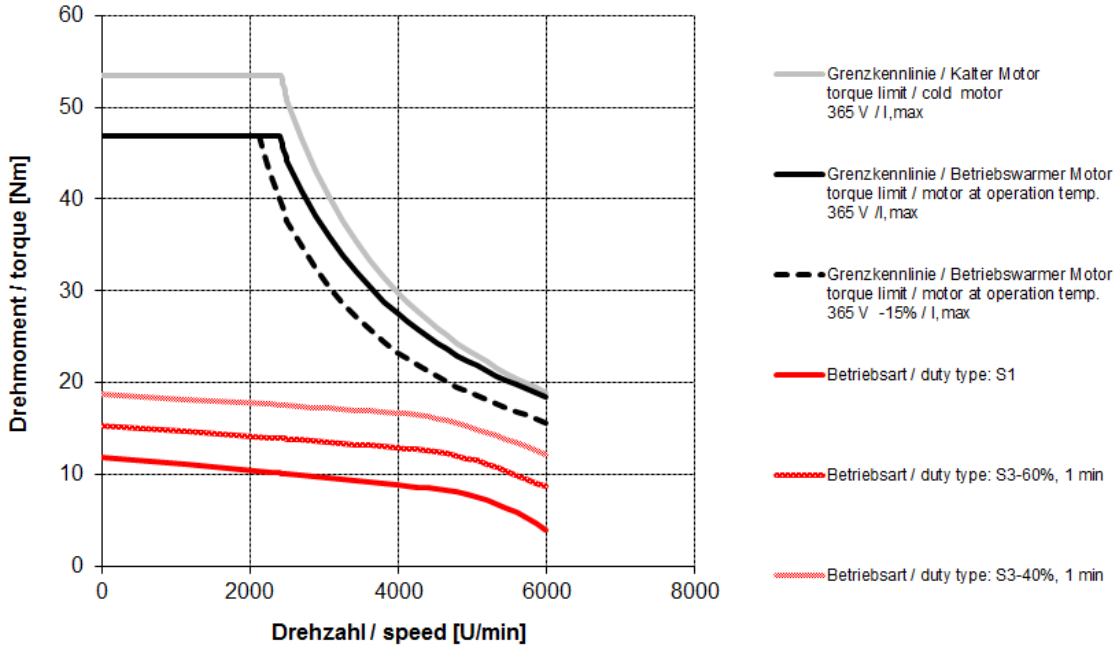

DSP1-056MO64U-60-54

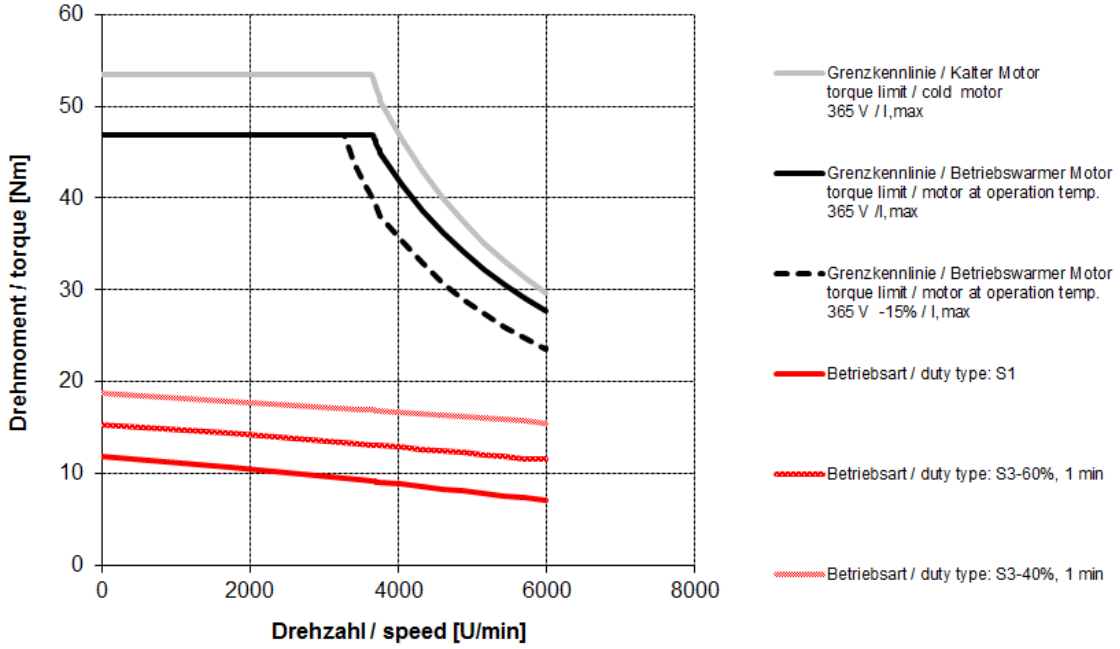

5.2.2. DSP1-056..64O-.. (with fan)

DSP1-056KO64O-60-54

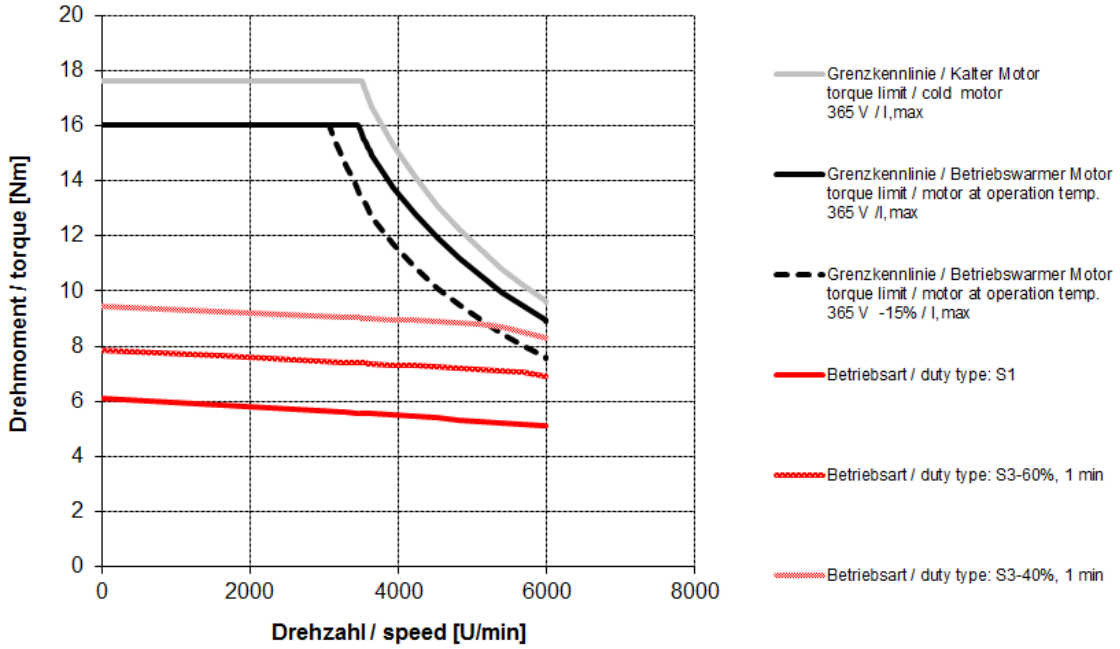

DSP1-056SO64O-60-54

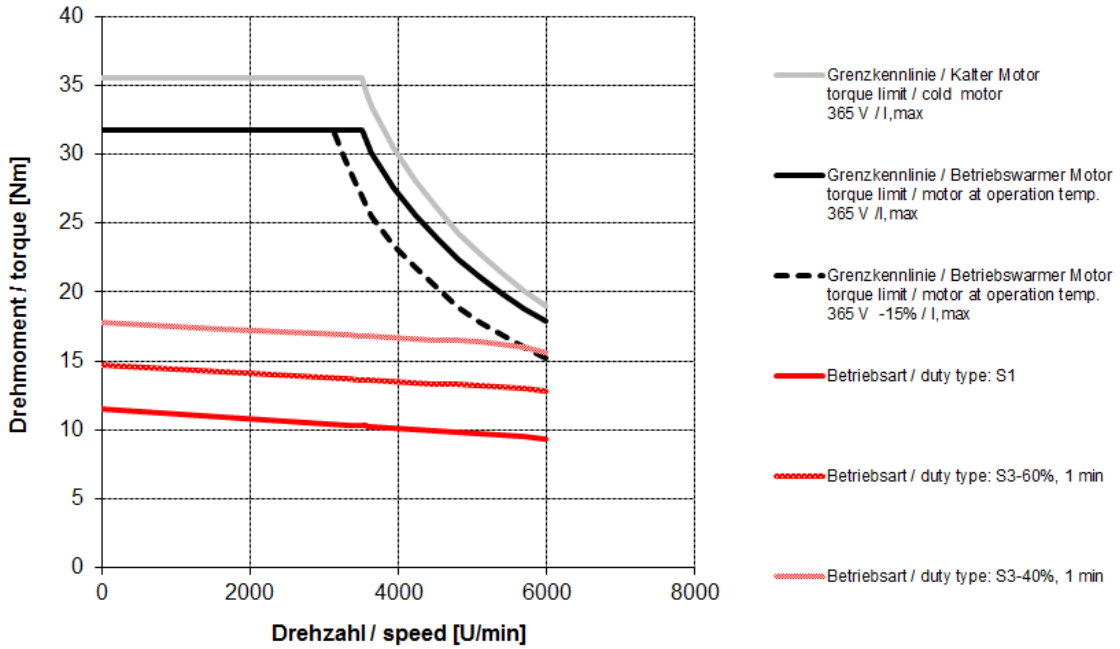

DSP1-056MO64O-40-54

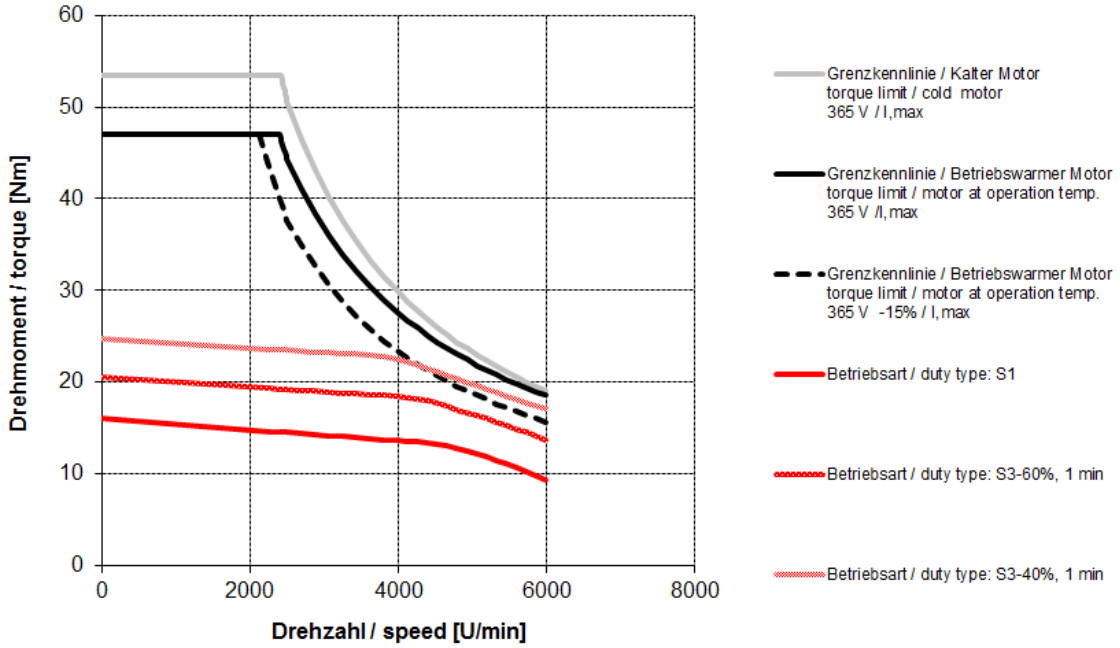

DSP1-056MO64O-60-54

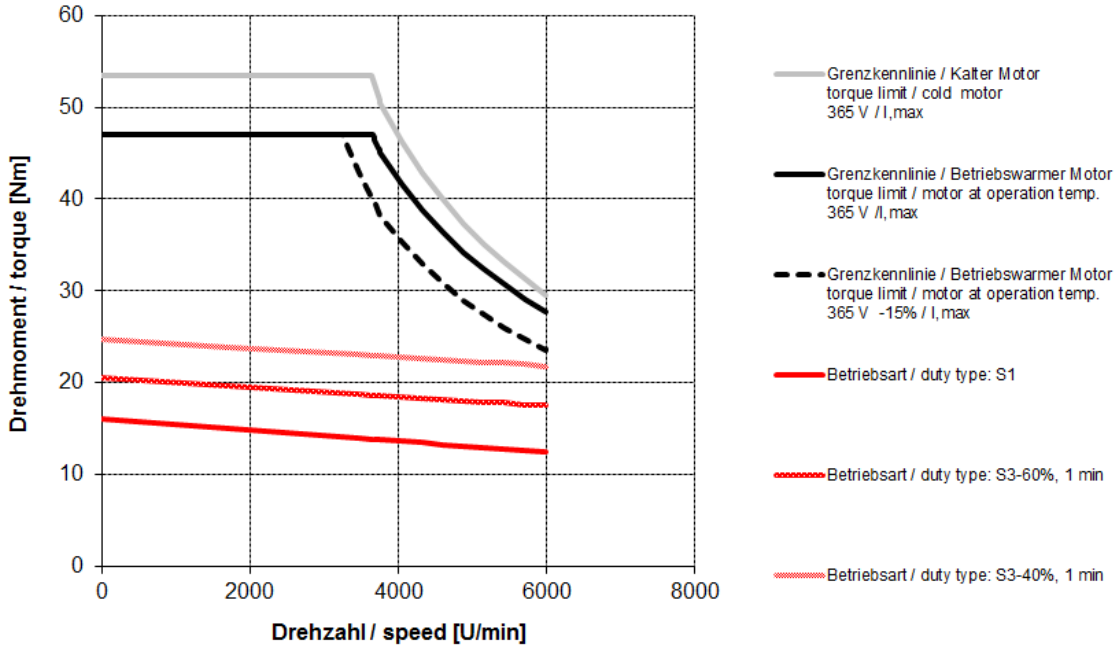

5.2.3. DSP1-056..64W-.. (water cooled)

DSP1-056MO64W-40-54

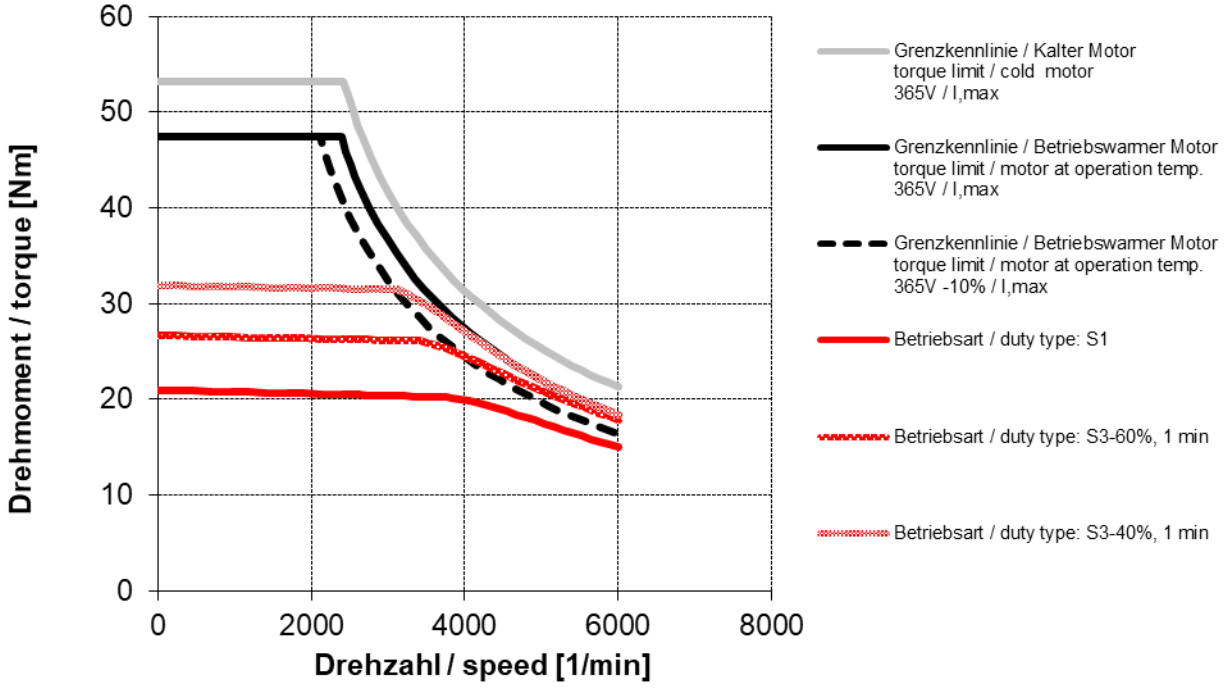

DSP1-056KO64W-60-54

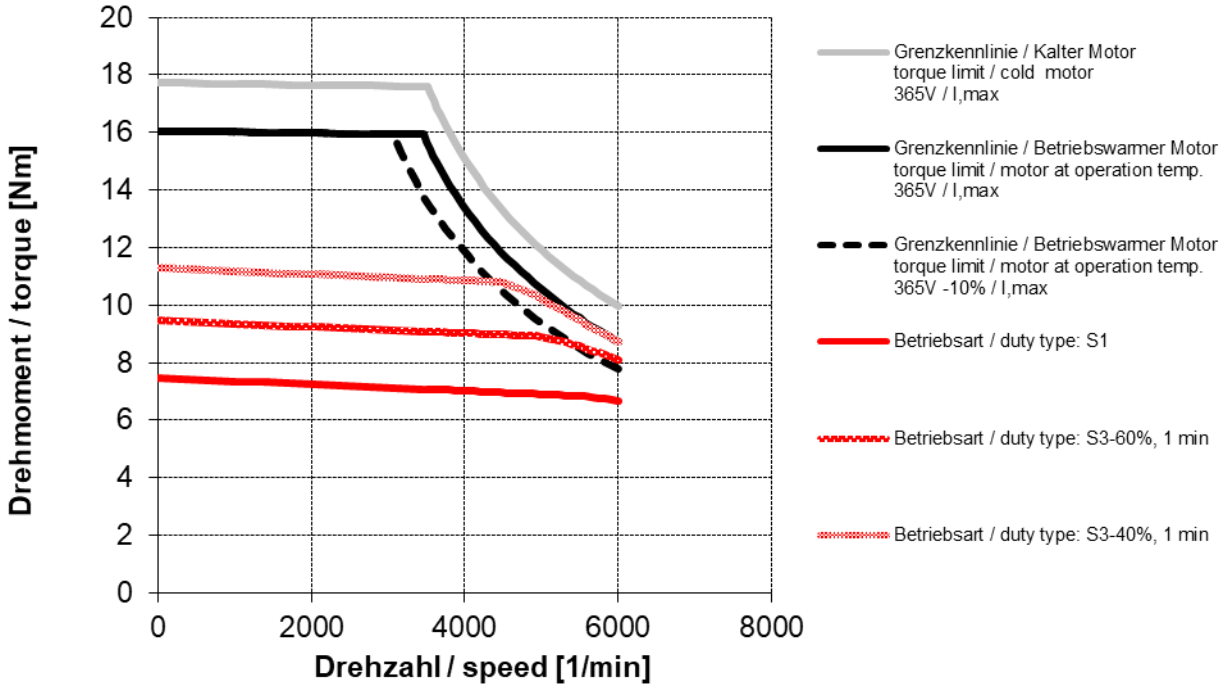

DSP1-056SO64W-60-54

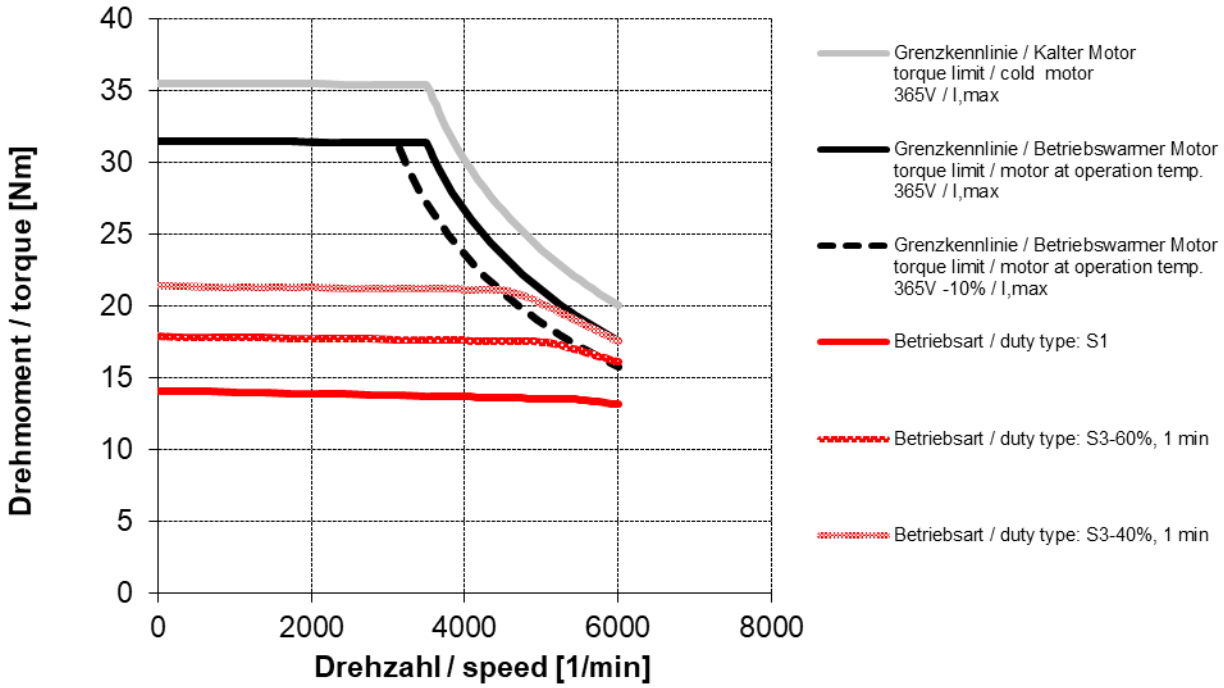

DSP1-056MO64W-60-54

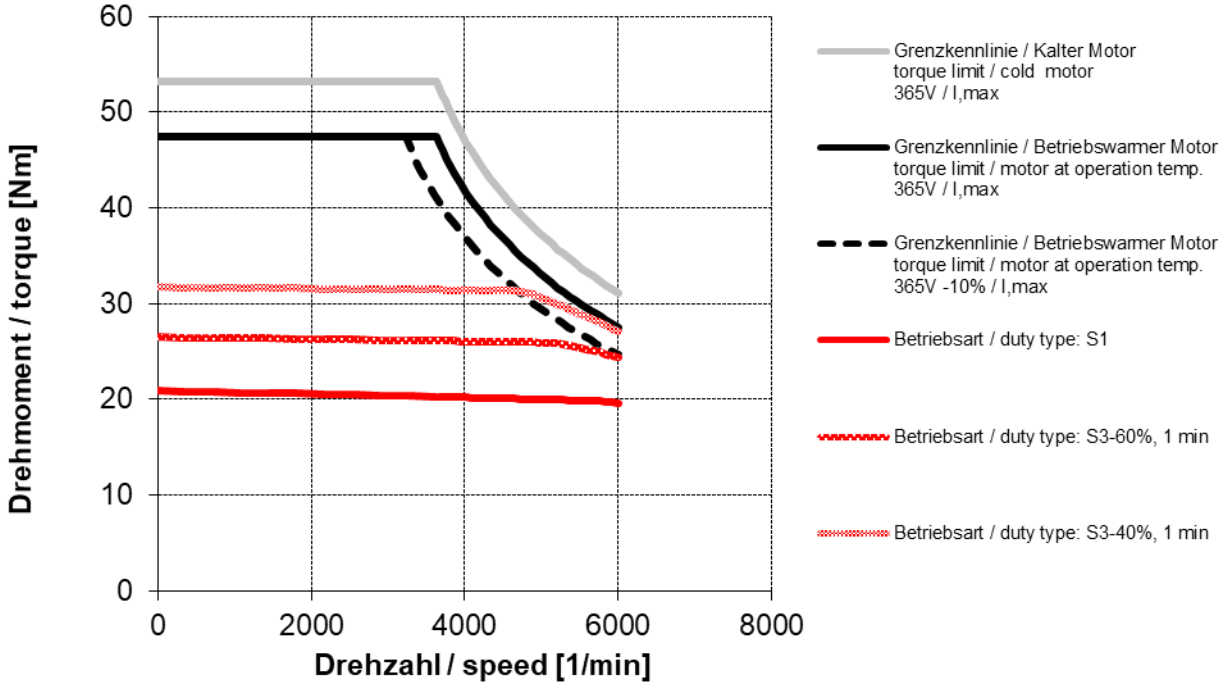

5.3. Characteristic curves DSP1-071

5.3.1. DSP1-071..64U-.. (without fan)

DSP1-071KO64U-60-5

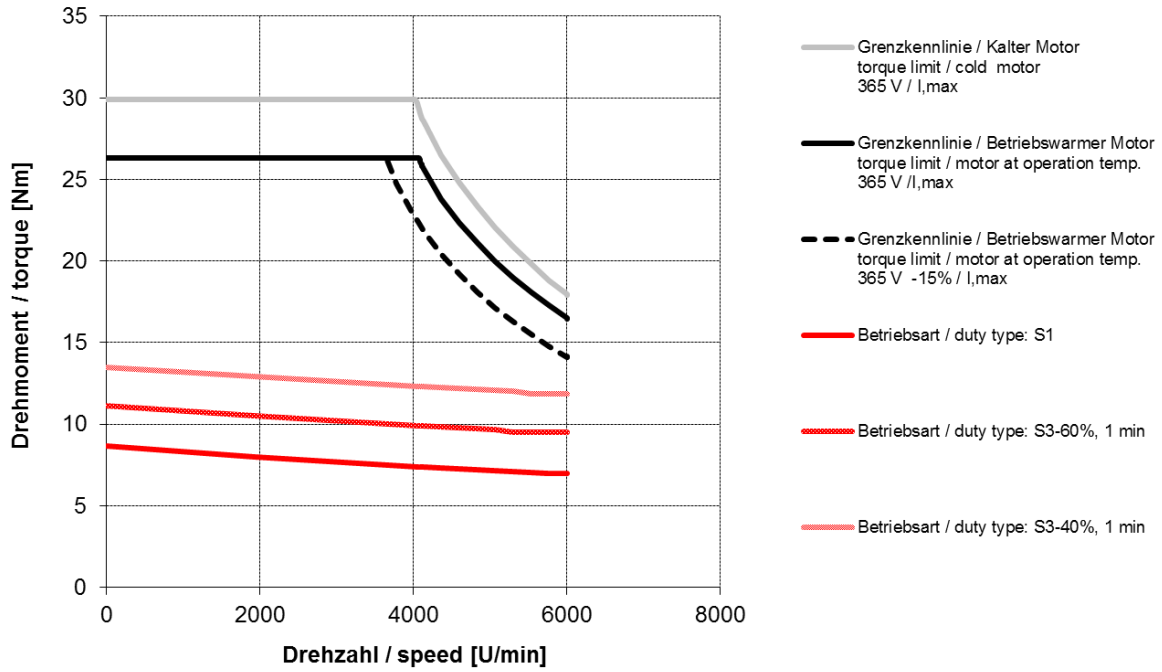

DSP1-071SO64U-60-5

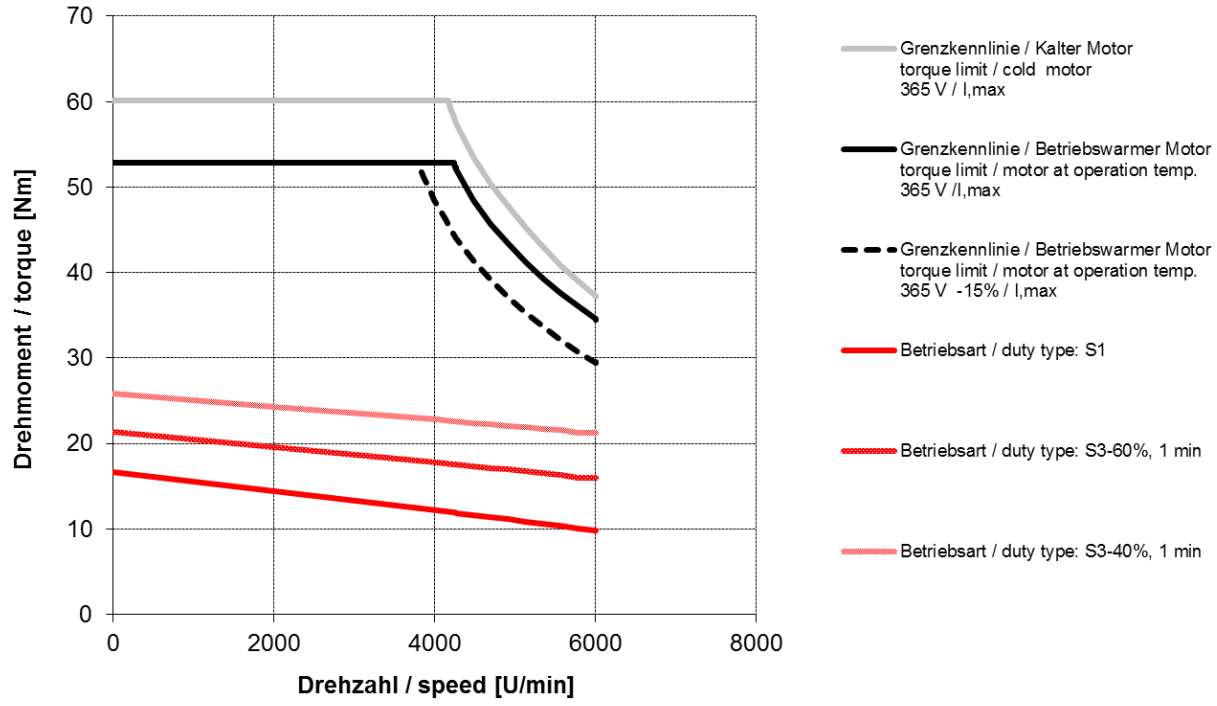

DSP1-071MO64U-40-5

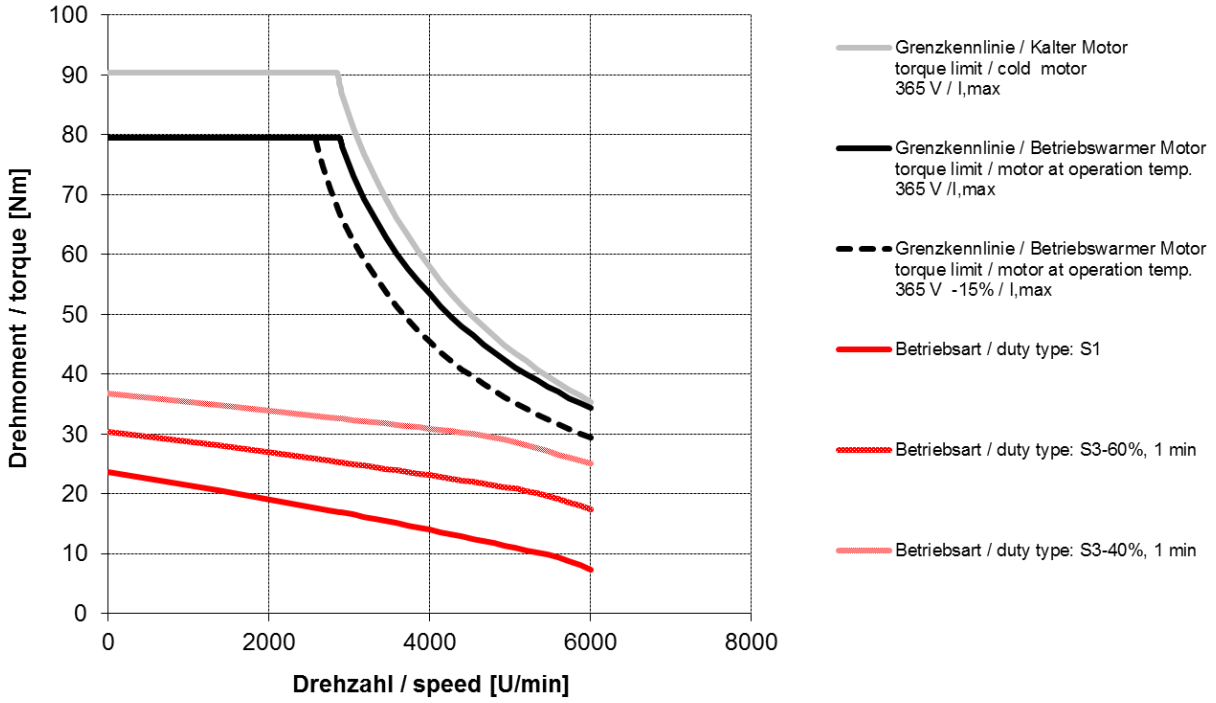

DSP1-071MO64U-60-5

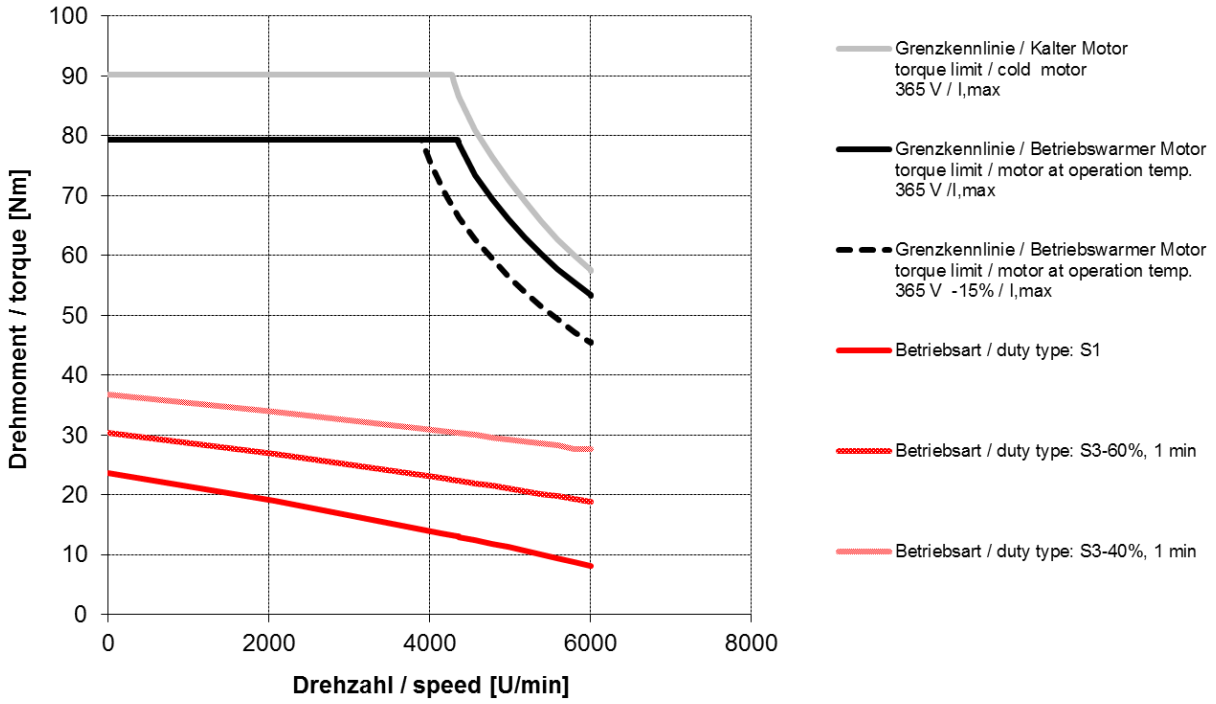

5.3.2. DSP1-071..64O-.. (with fan)

DSP1-071KO64O-60-5

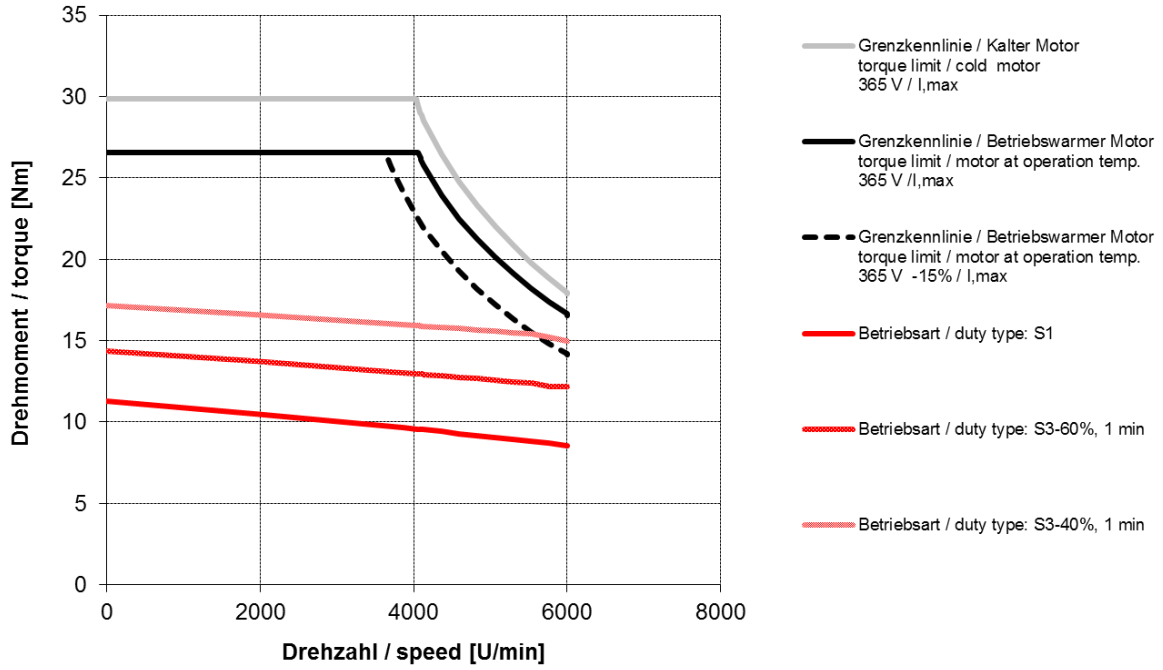

DSP1-071SO64O-60-5

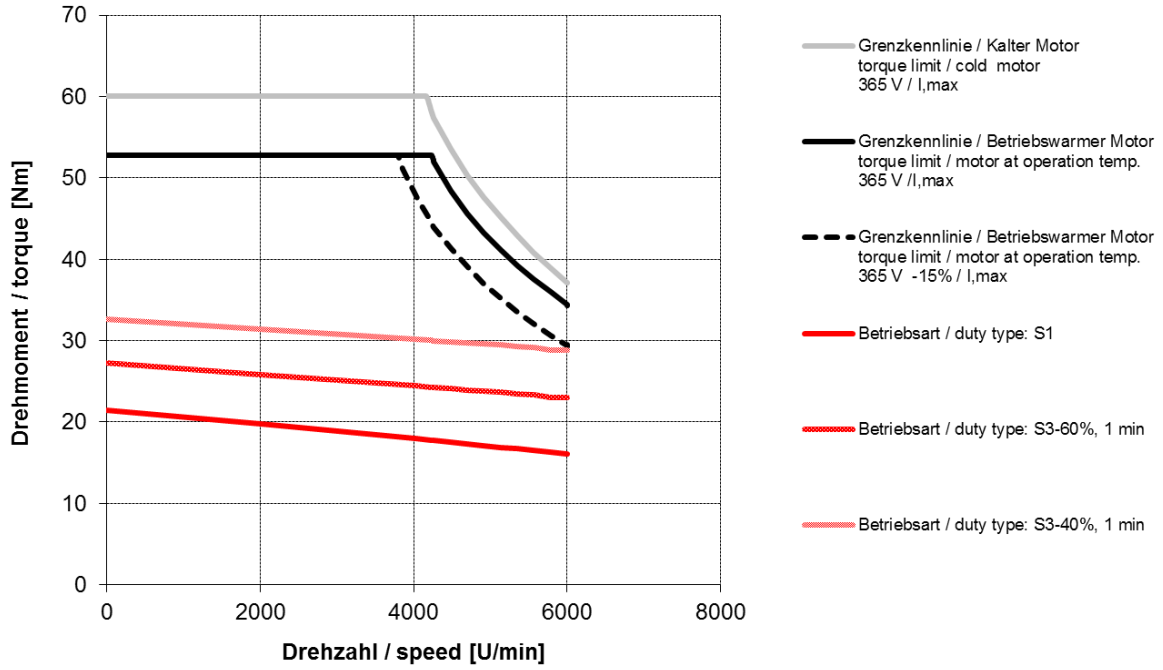

DSP1-071MO64O-40-5

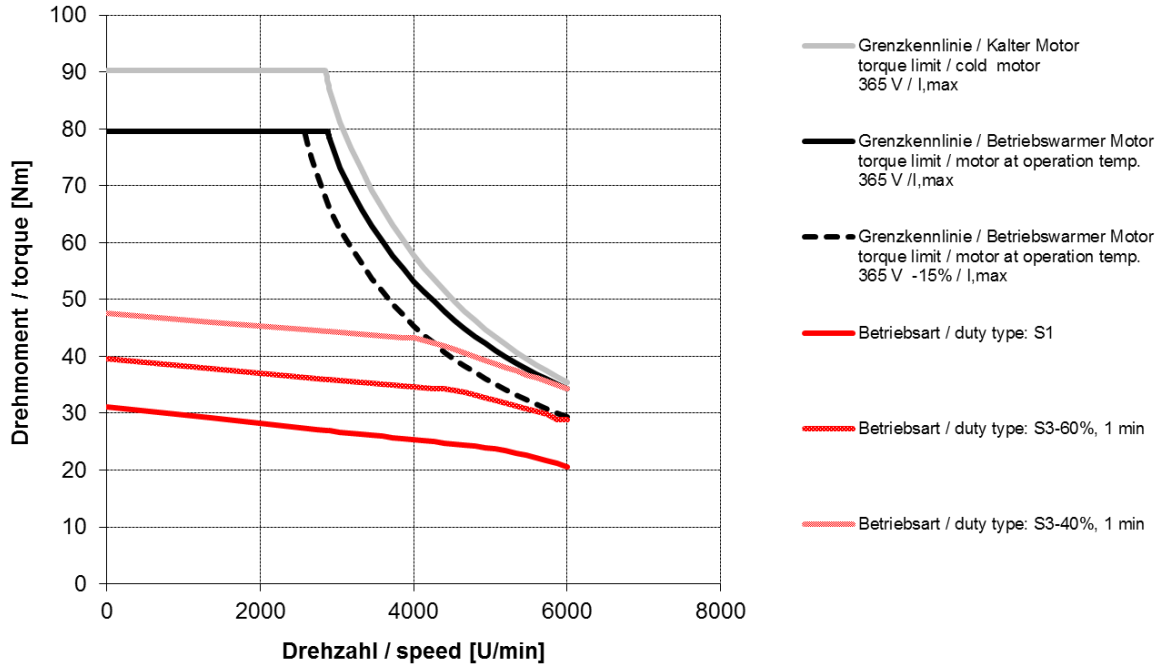

DSP1-071MO64O-60-5

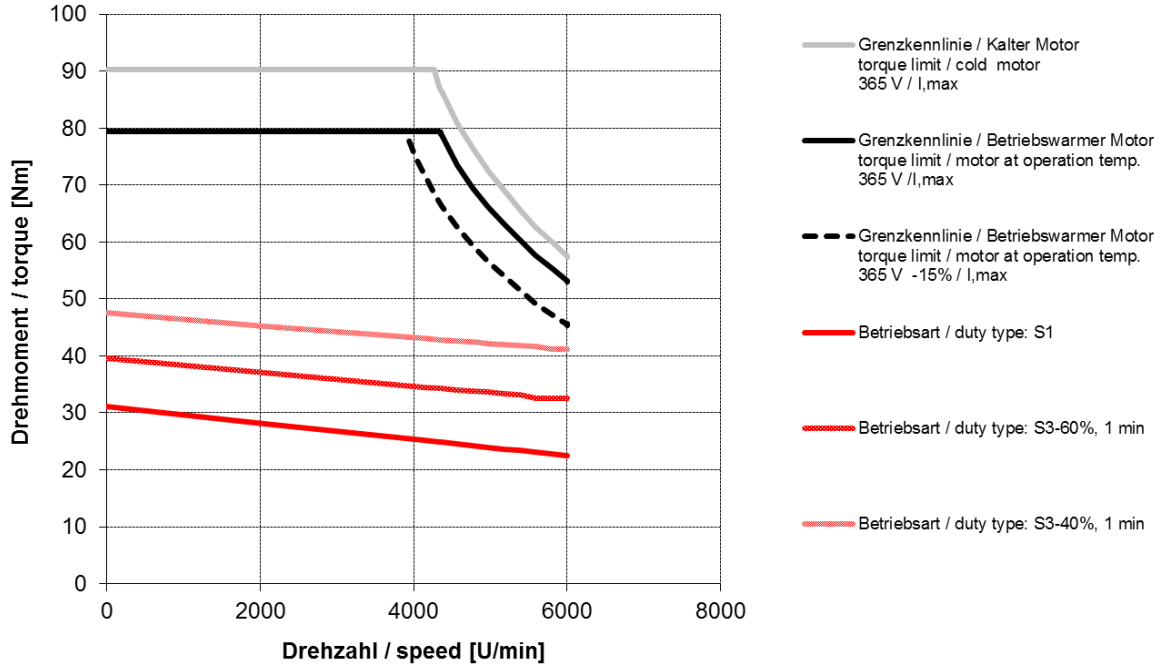

5.3.3. DSP1-071..64W-.. (water cooled)

DSP1-071KO64W-60-5

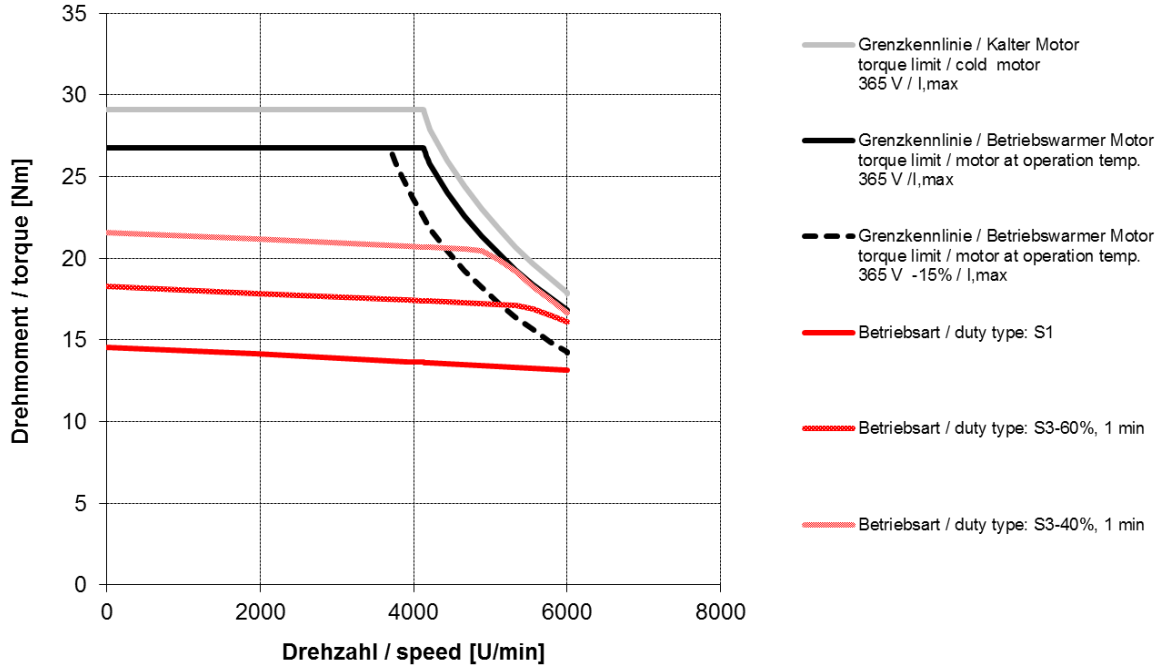

DSP1-071SO64W-60-5

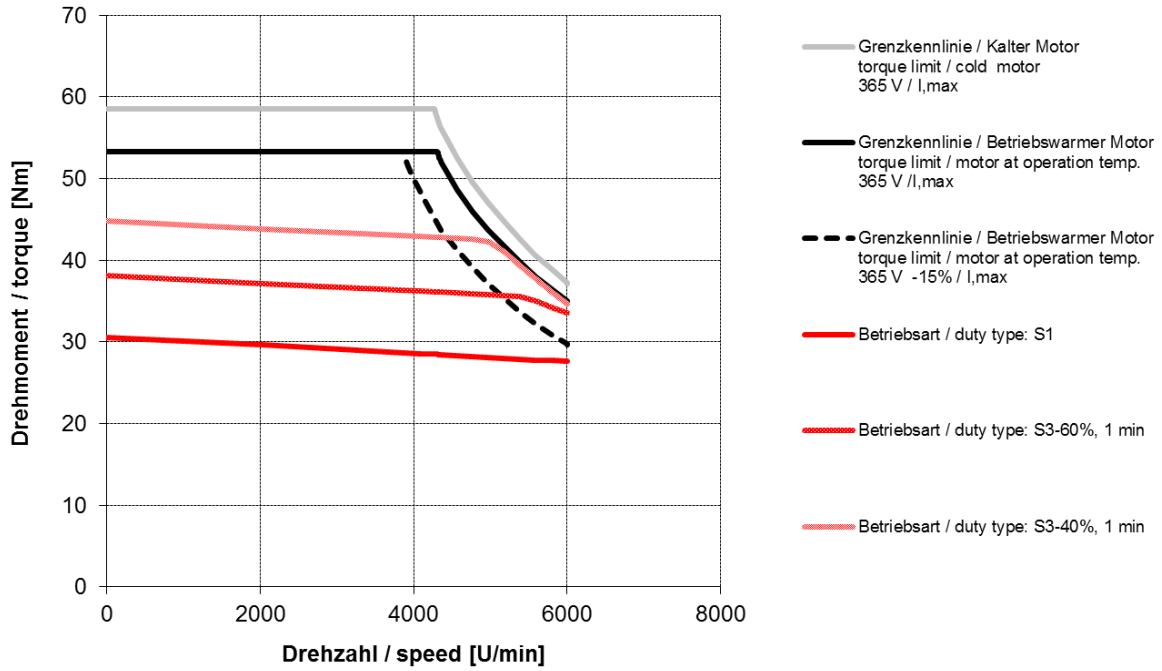

DSP1-071MO64W-40-5

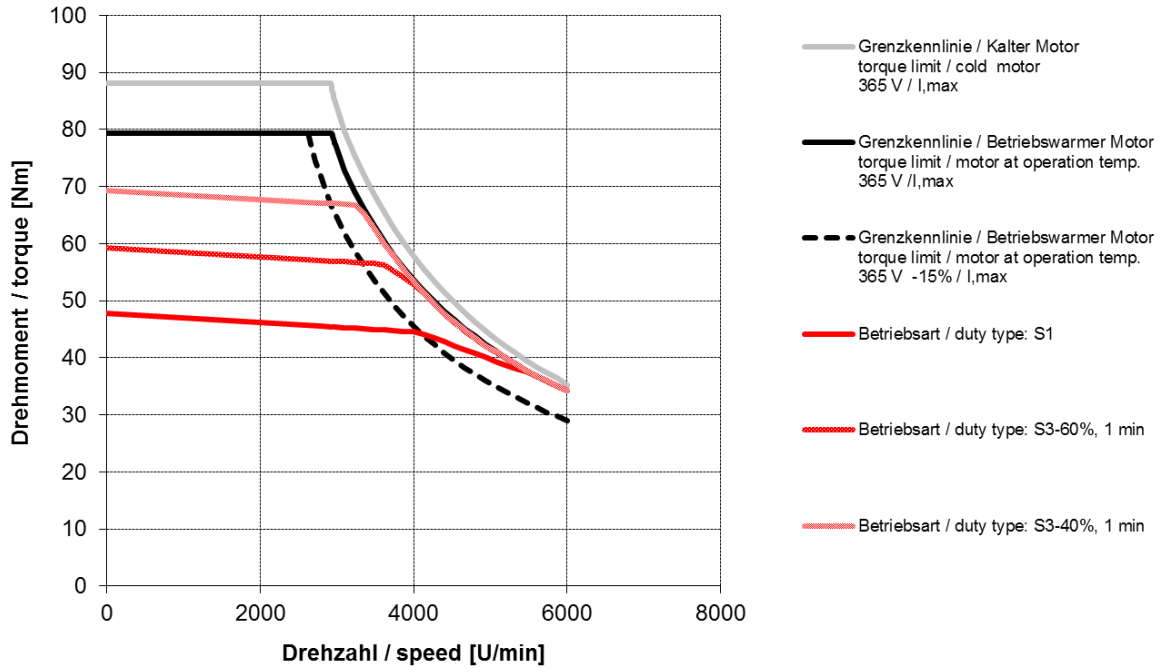

DSP1-071MO64W-60-5

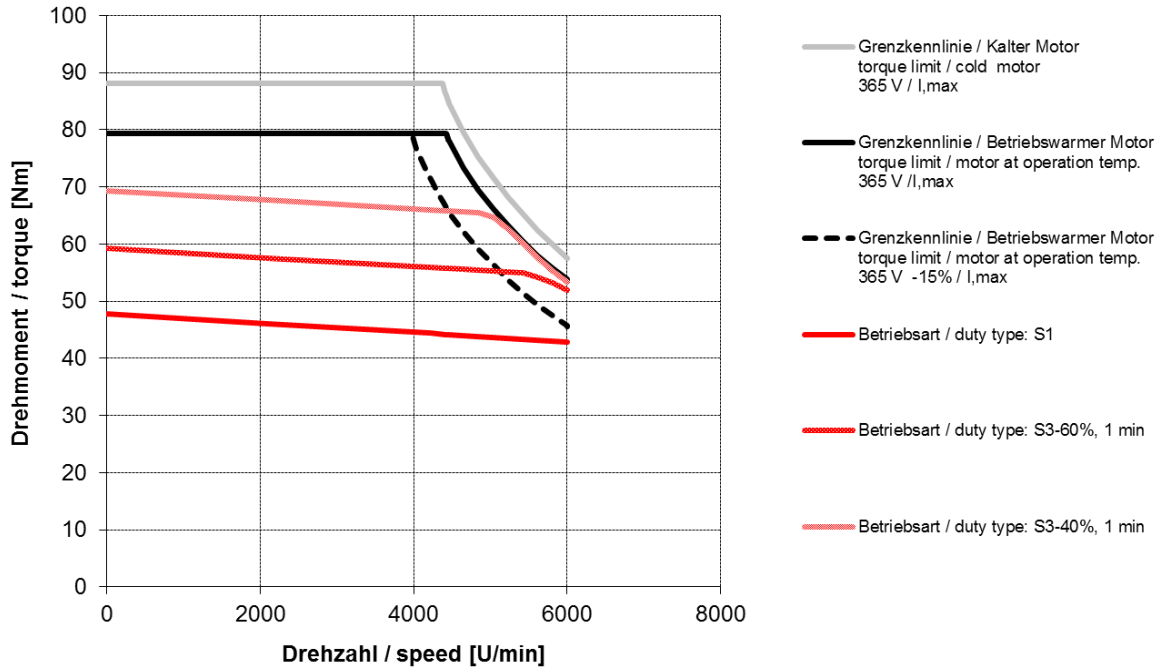

5.4. Characteristic curves DSP1-100

5.4.1. DSP1-100..64U-.. (without fan)

DSP1-100KO64U-40-5

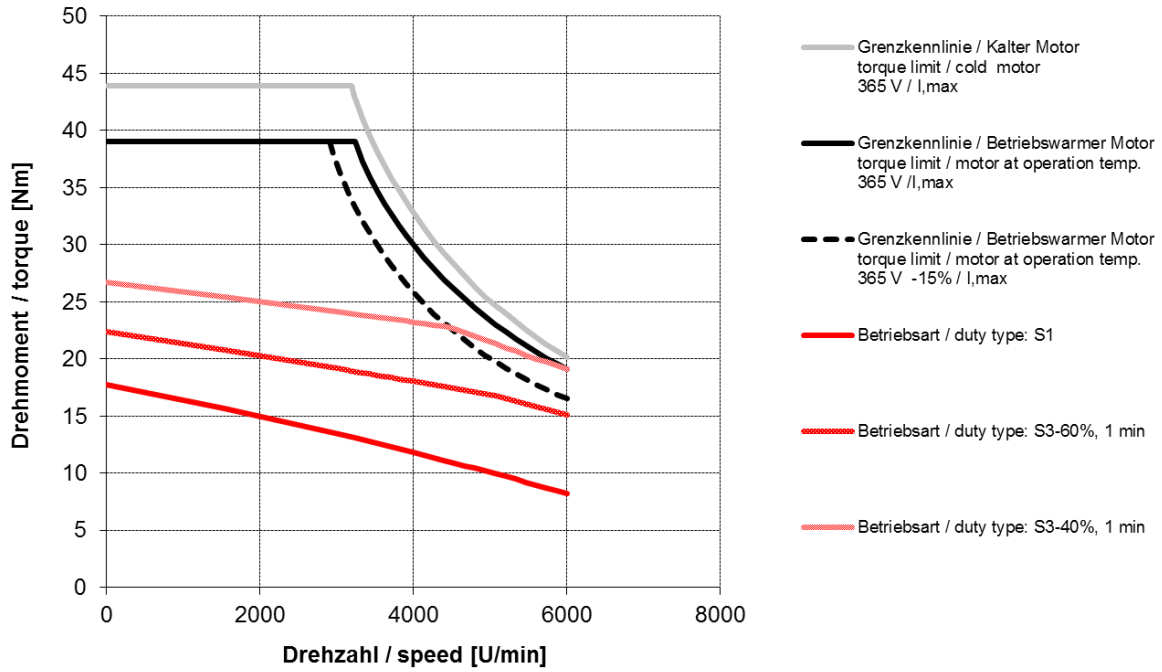

DSP1-100KO64U-60-5

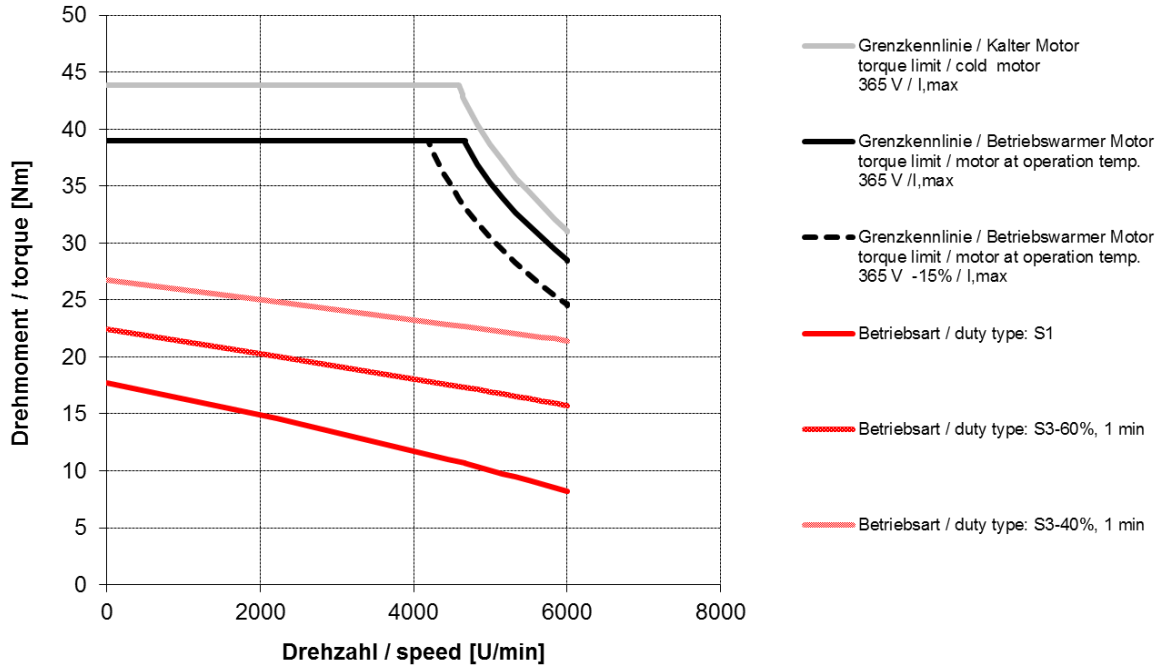

DSP1-100SO64U-40-5

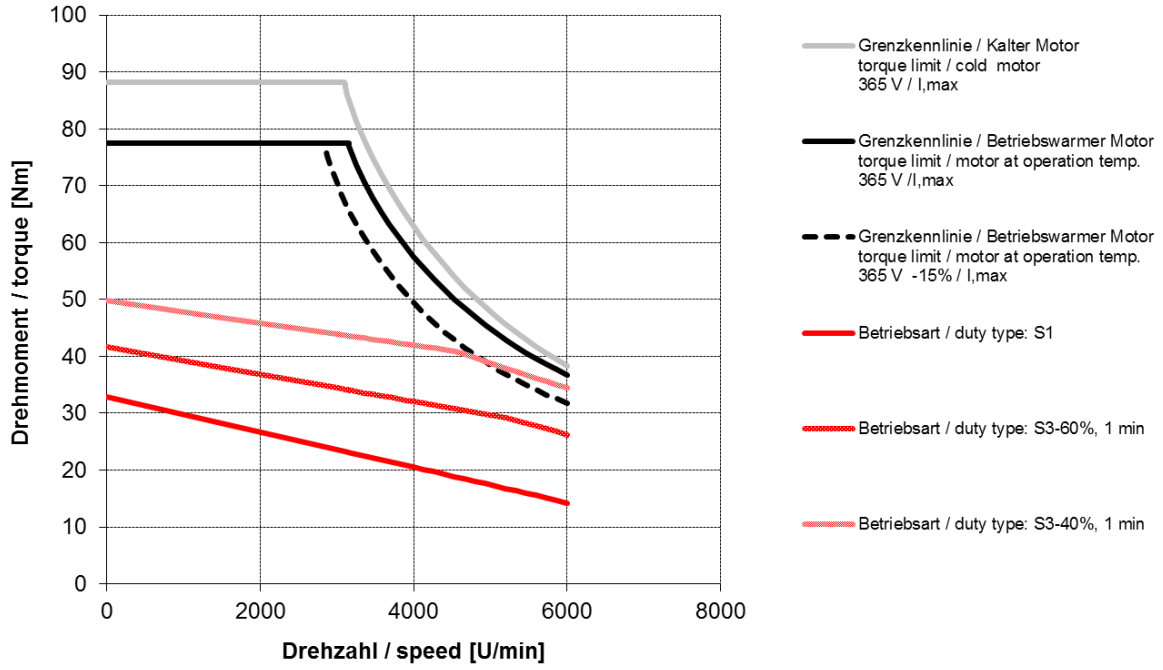

DSP1-100SO64U-60-5

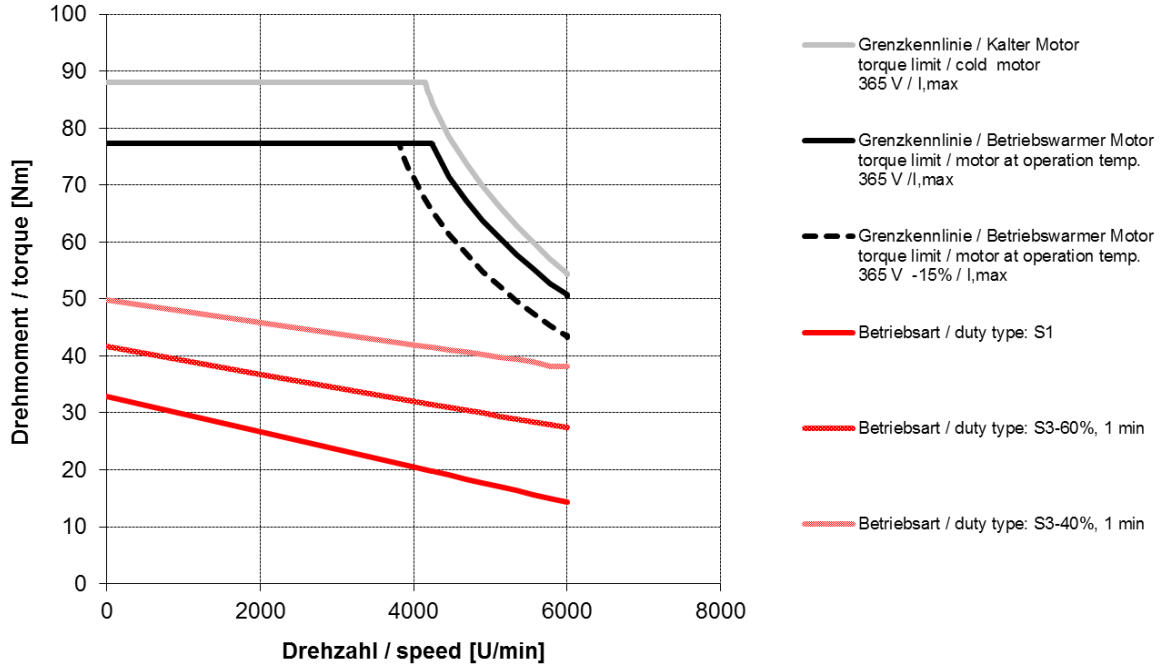

DSP1-100MO64U-30-5

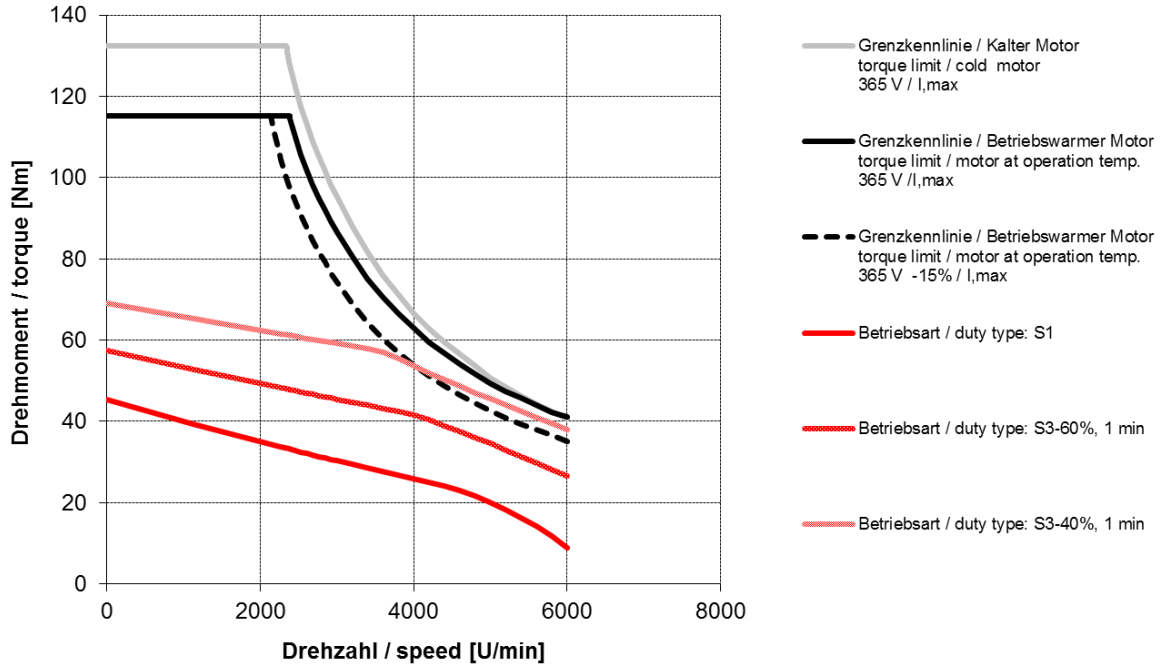

DSP1-100MO64U-40-5

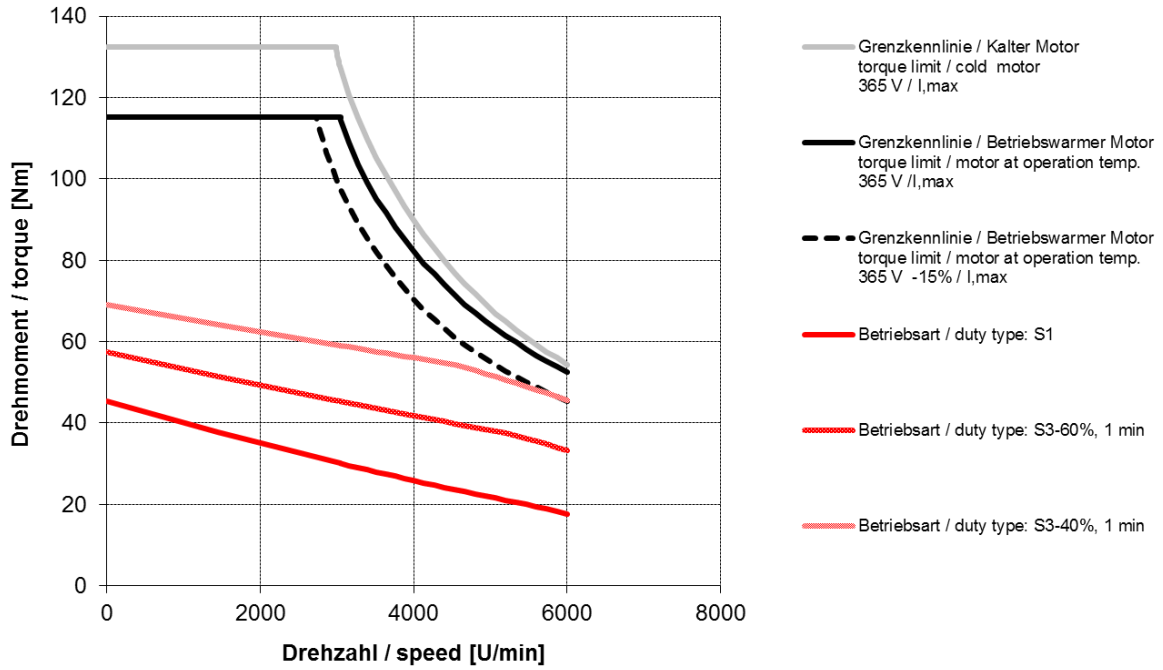

DSP1-100MO64U-60-5

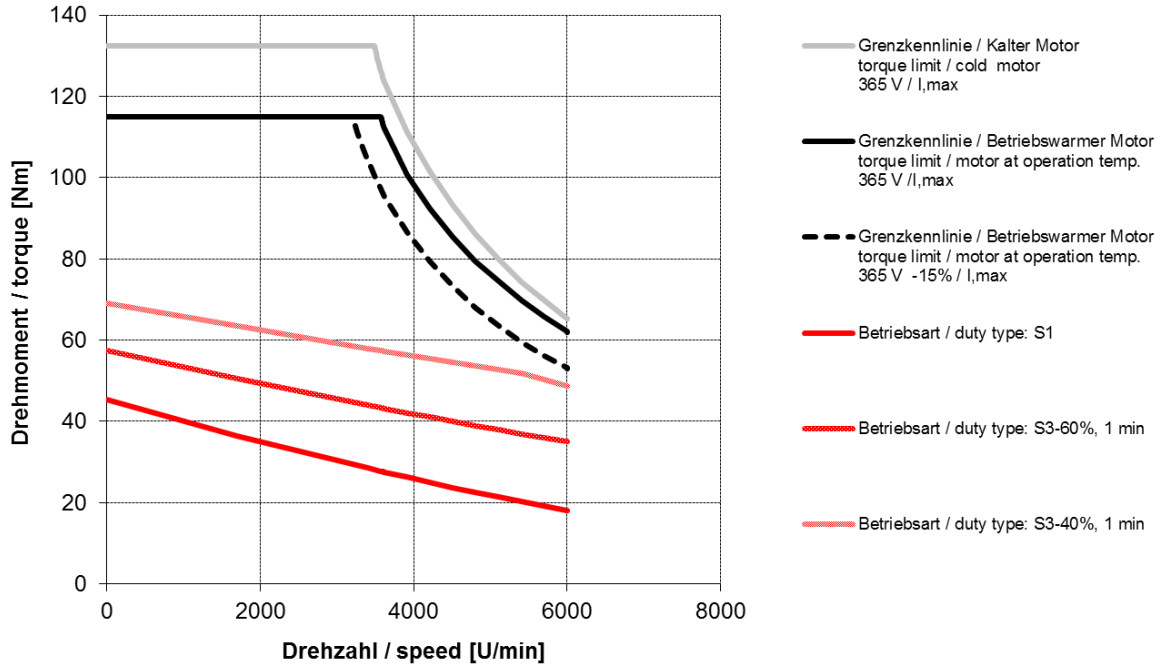

DSP1-100LO64U-10-5

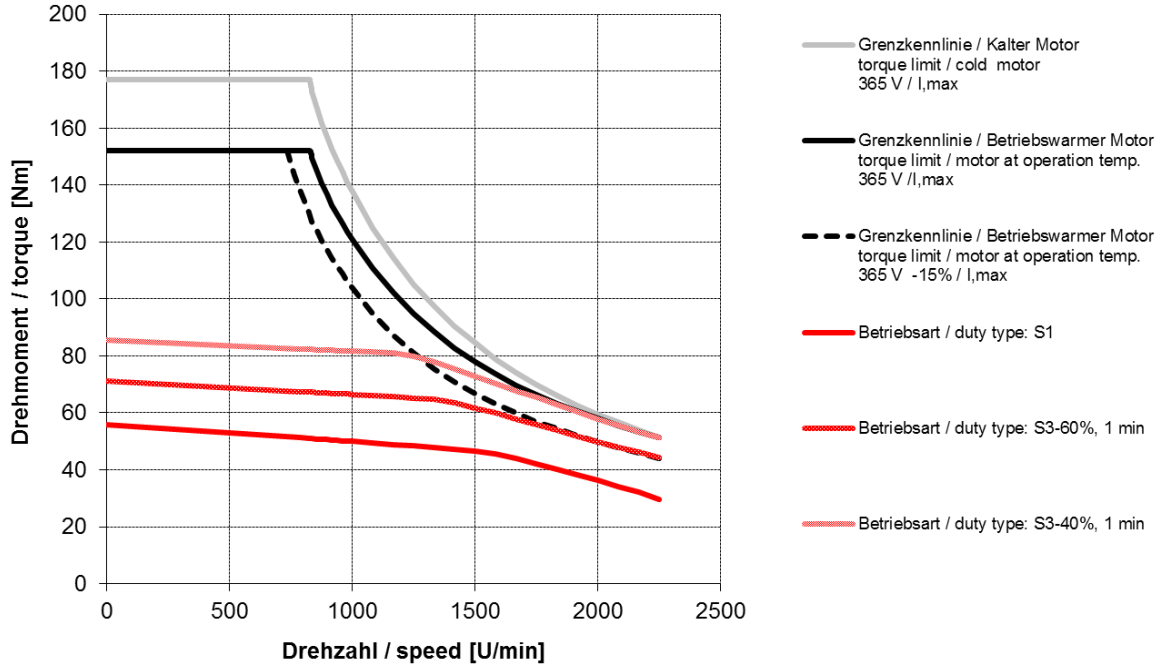

DSP1-100LO64U-20-5

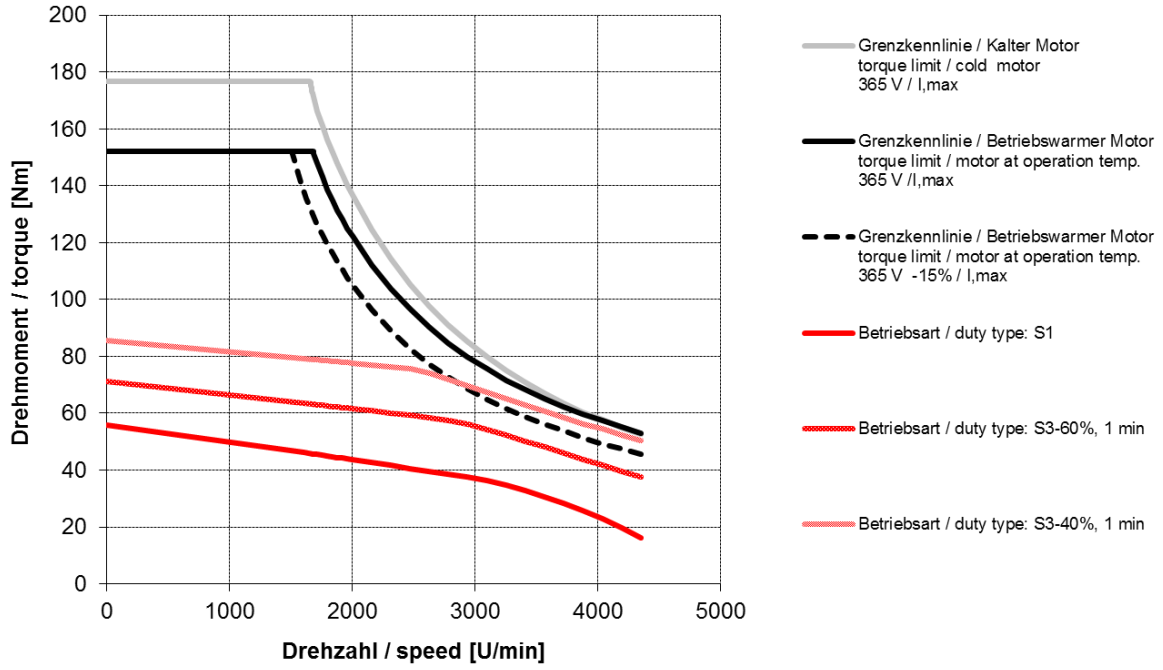

DSP1-100LO64U-30-5

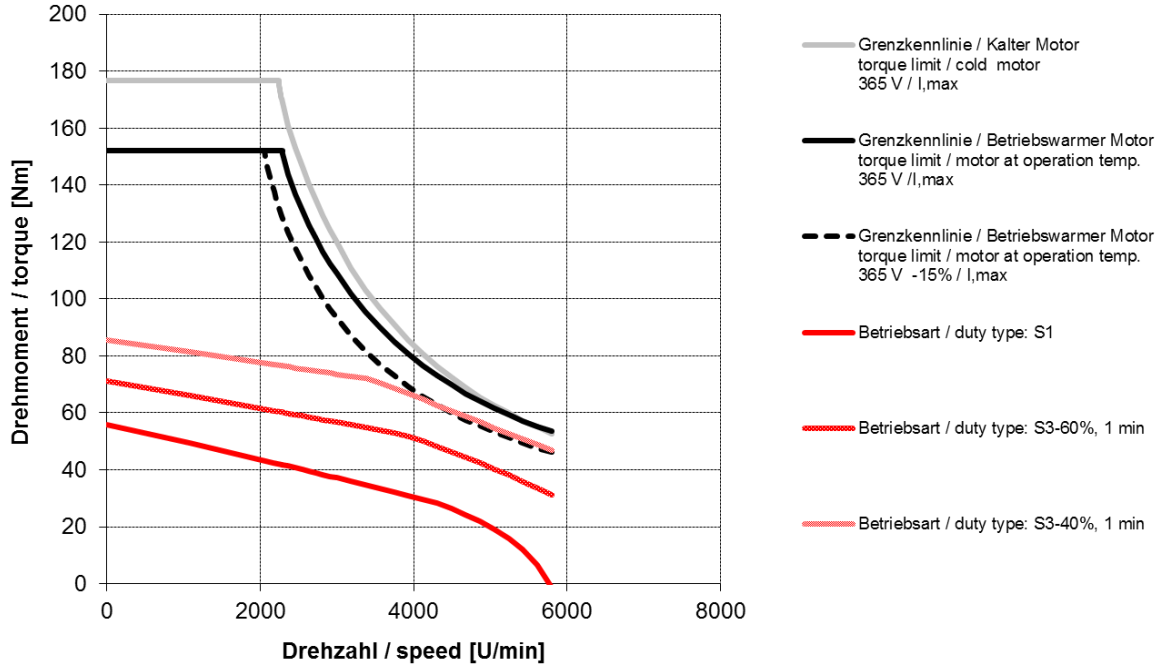

DSP1-100LO64U-40-5

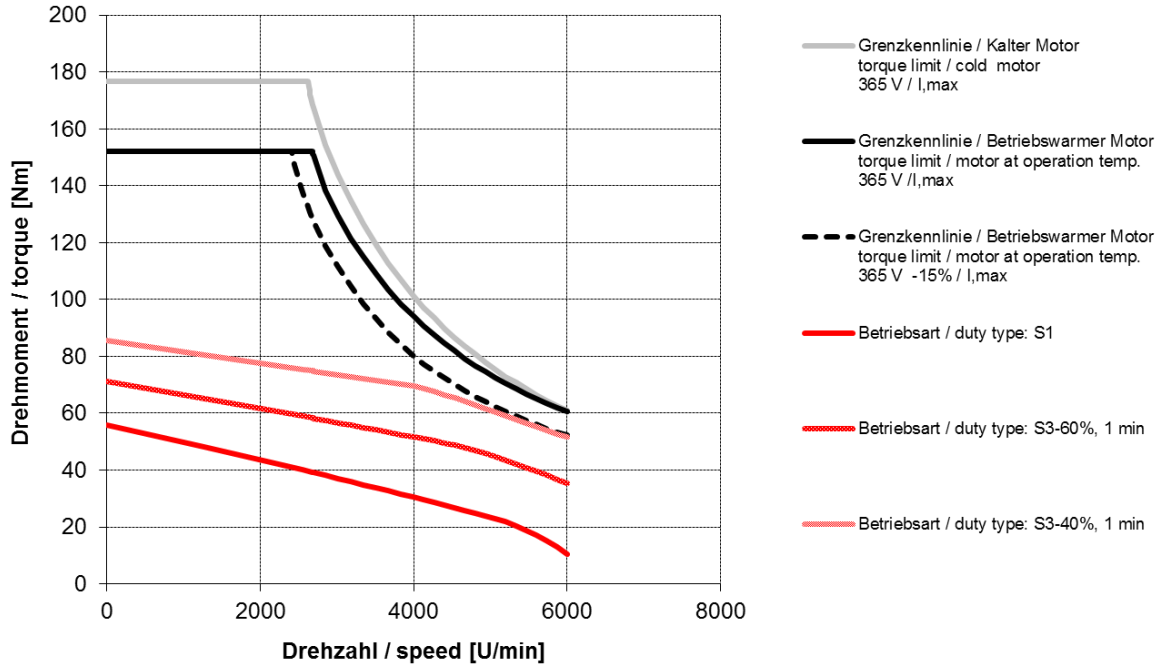

5.4.2. DSP1-100..64O-.. (with fan)

DSP1-100KO64O-40-5

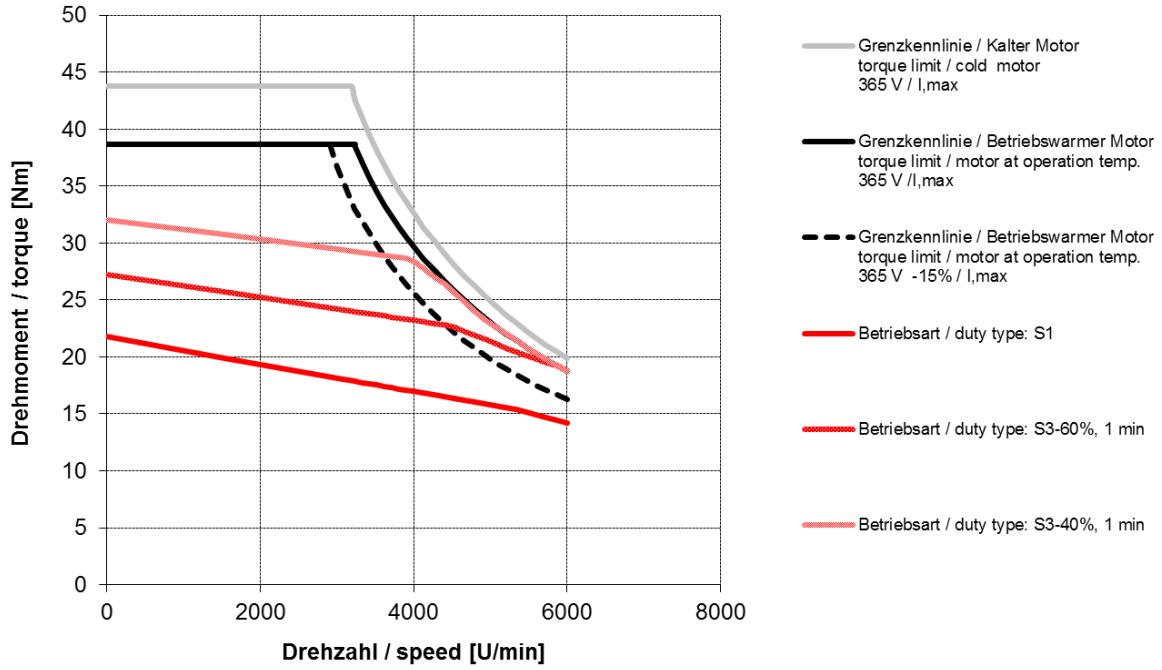

DSP1-100KO64O-60-5

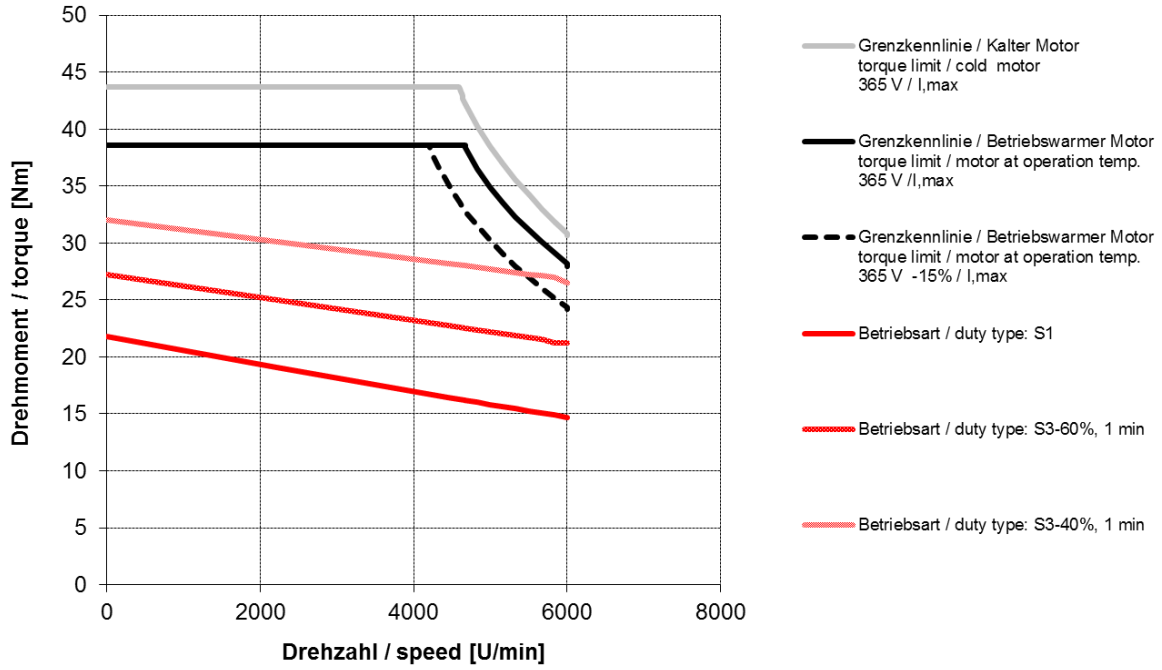

DSP1-100SO64O-40-5

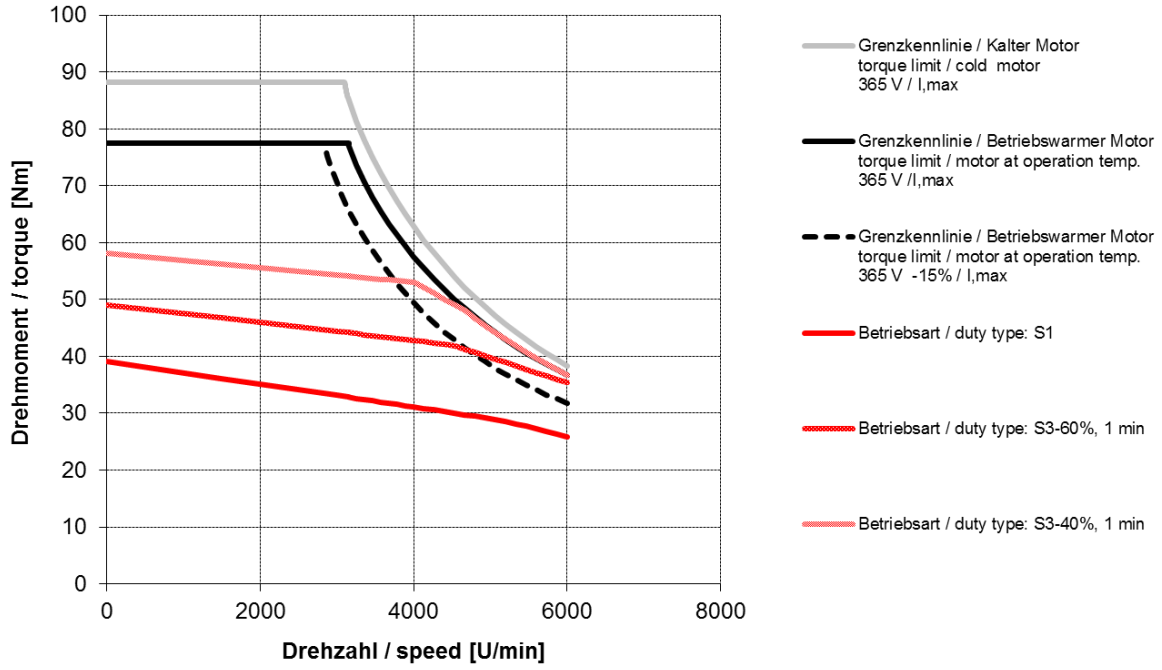

DSP1-100SO64O-60-5

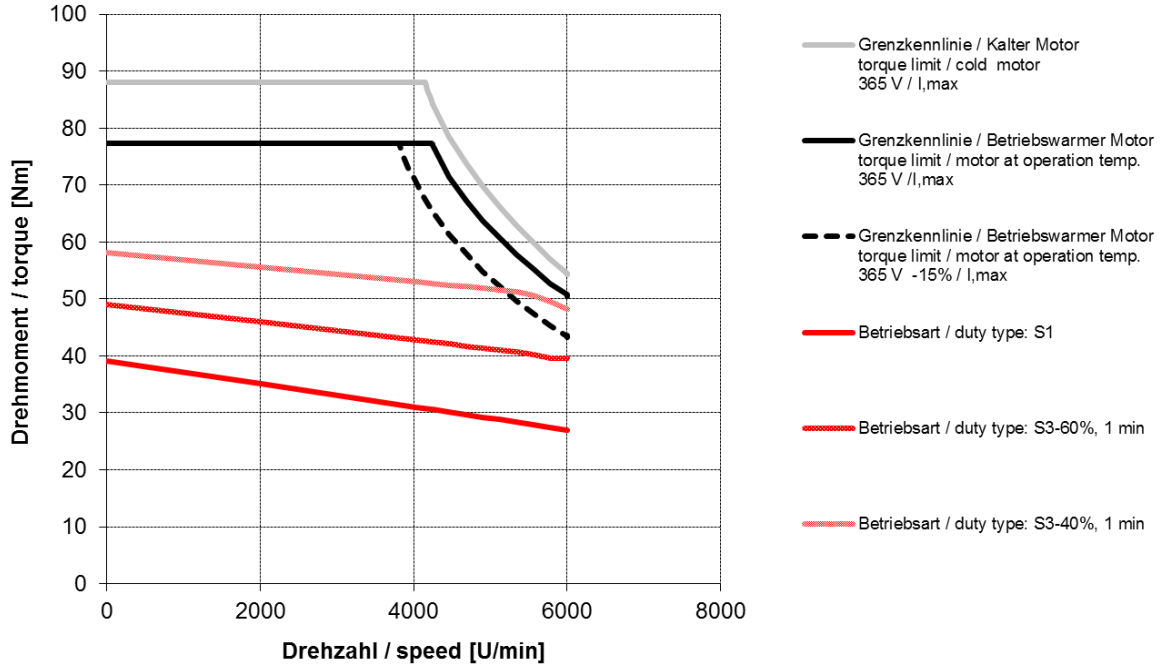

DSP1-100MO64O-30-5

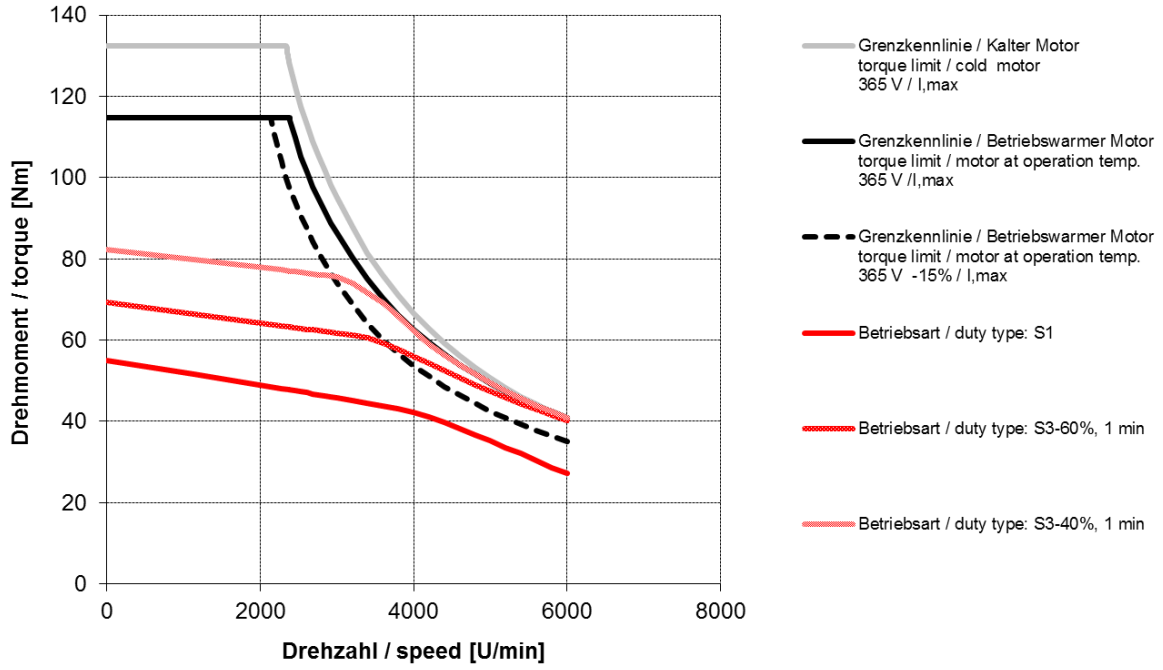

DSP1-100MO64O-40-5

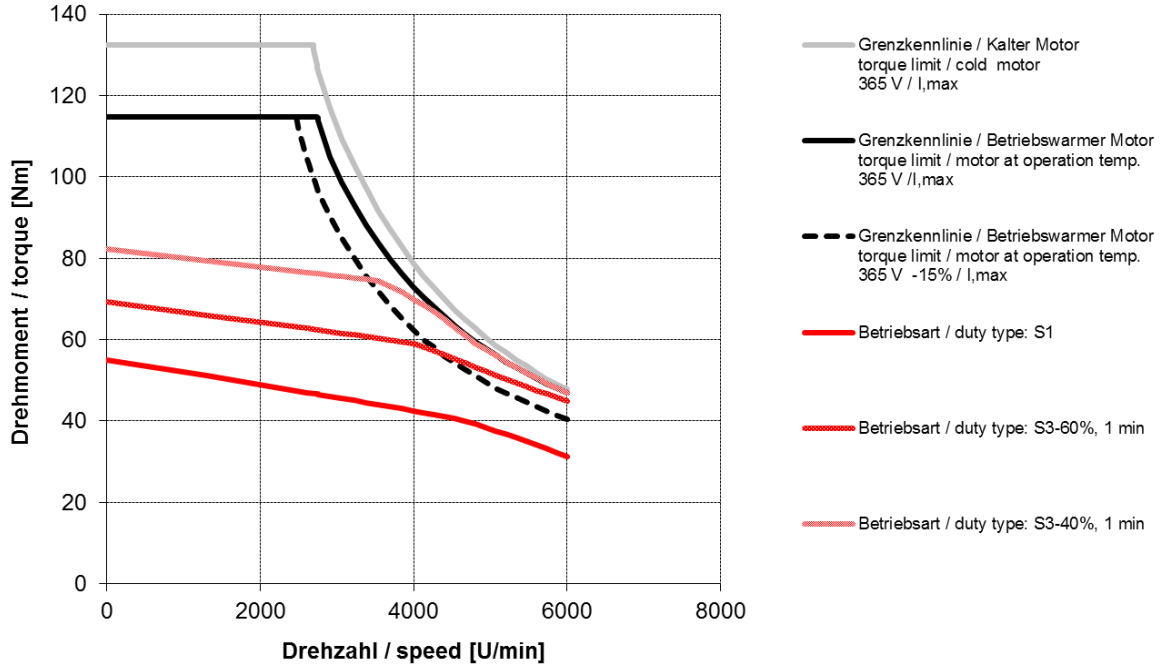

DSP1-100MO64O-60-5

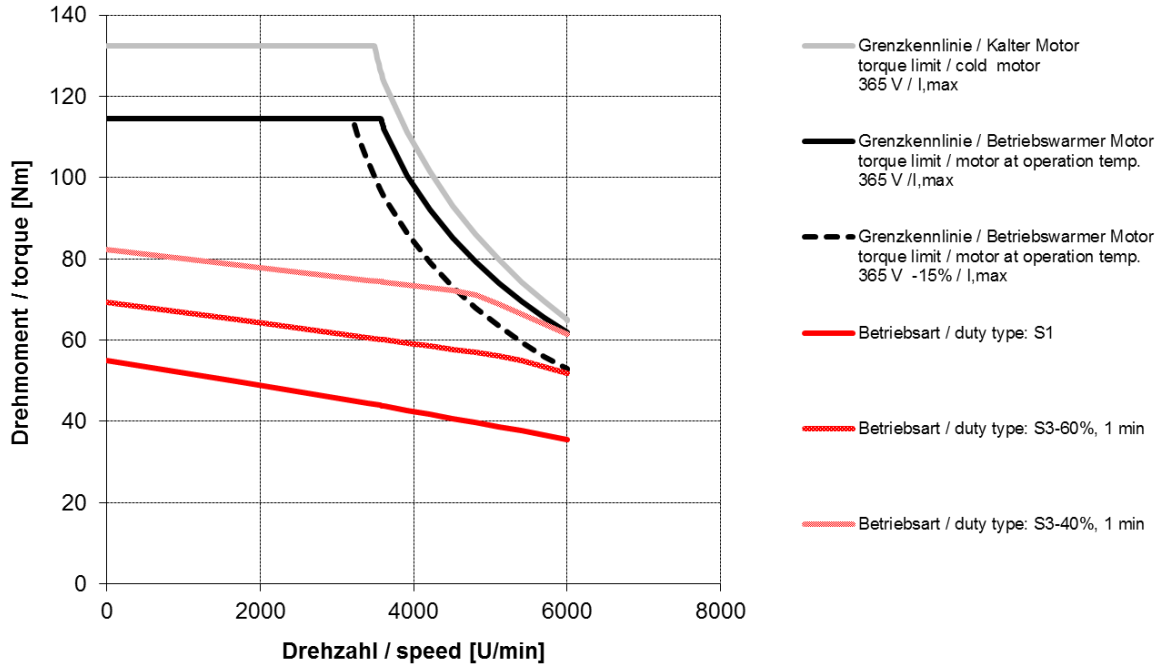

DSP1-100LO64O-10-5

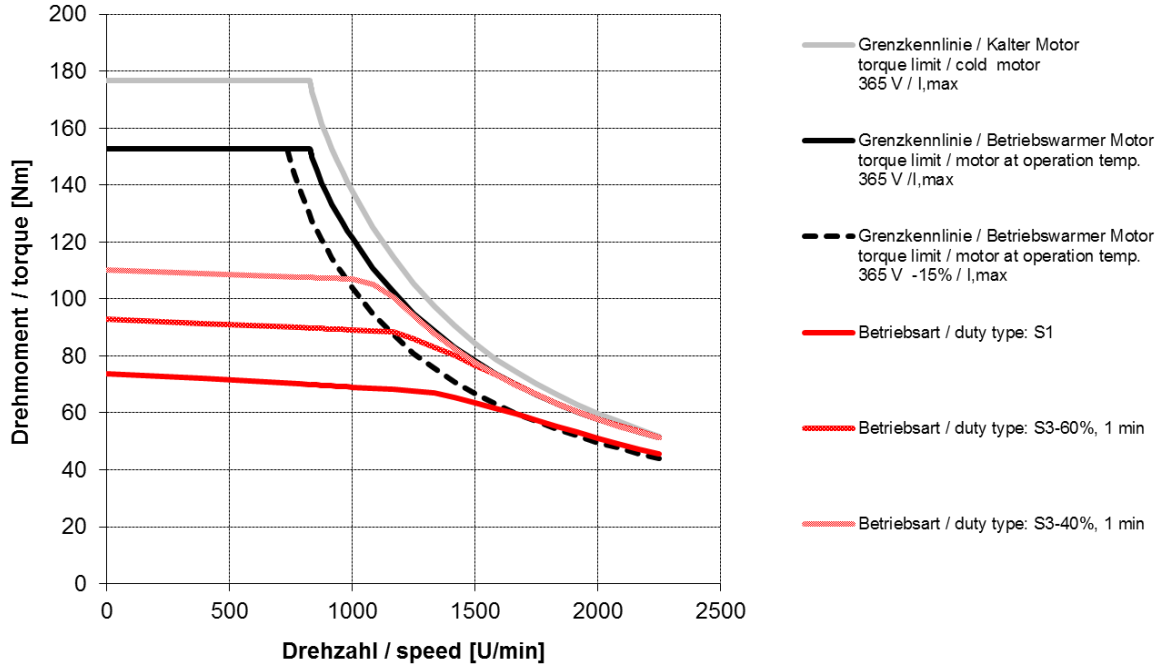

DSP1-100LO64O-20-5

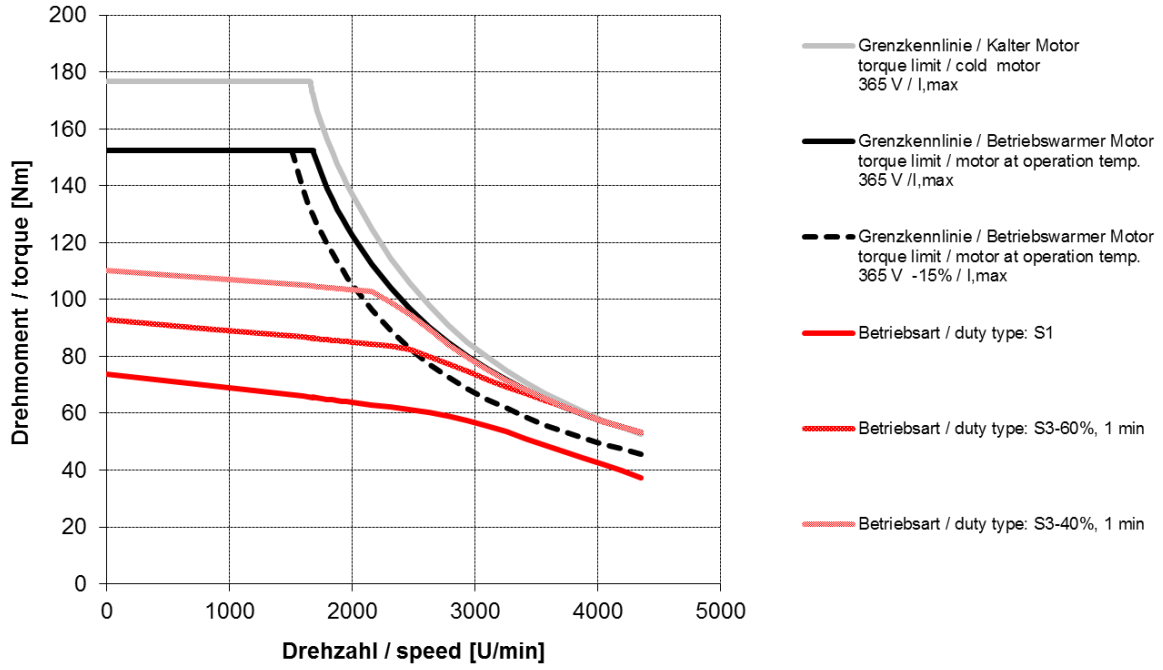

DSP1-100LO64O-30-5

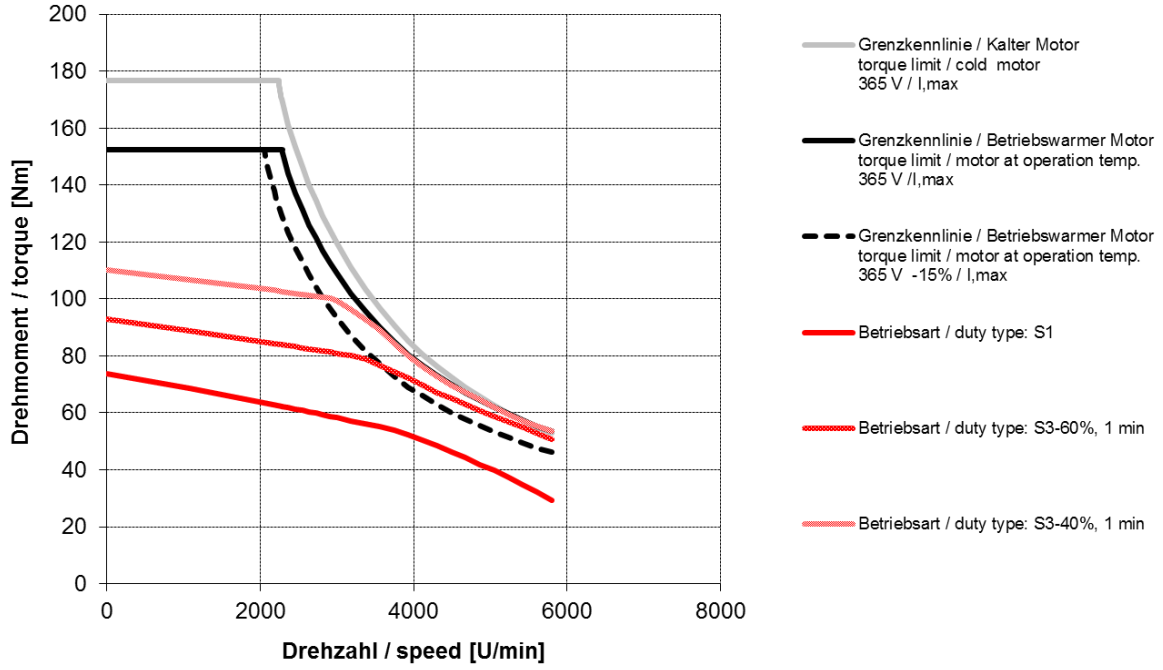

DSP1-100LO64O-40-5

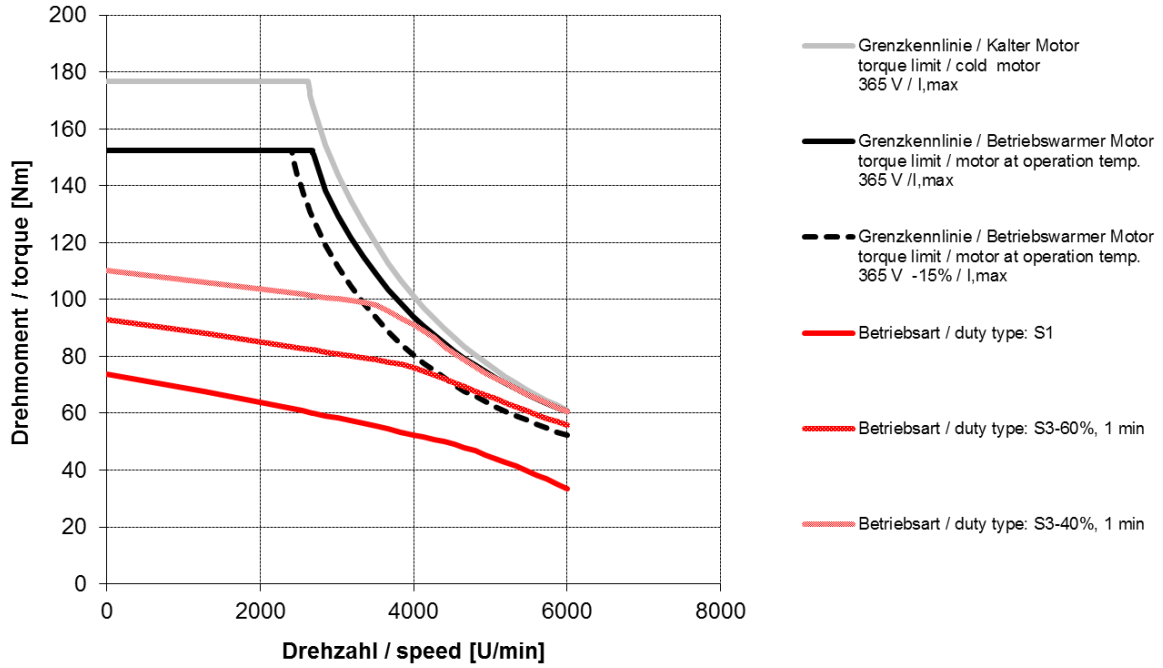

5.4.3. DSP1-100..64W-.. (water cooled)

DSP1-100KO64W-40-5

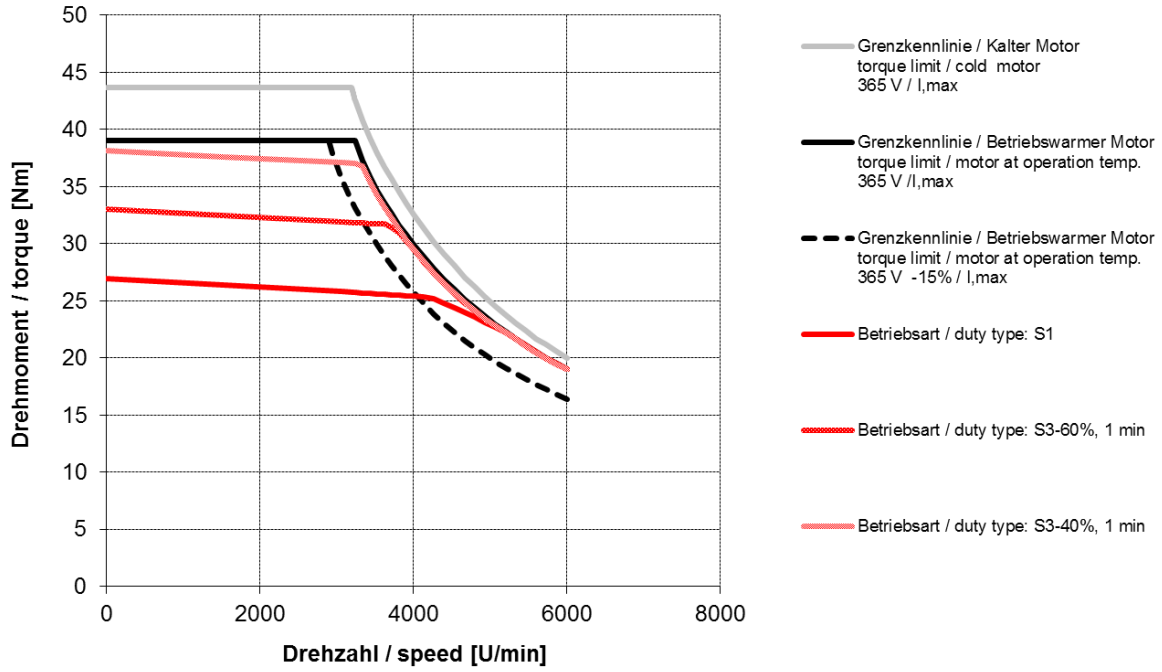

DSP1-100KO64W-60-5

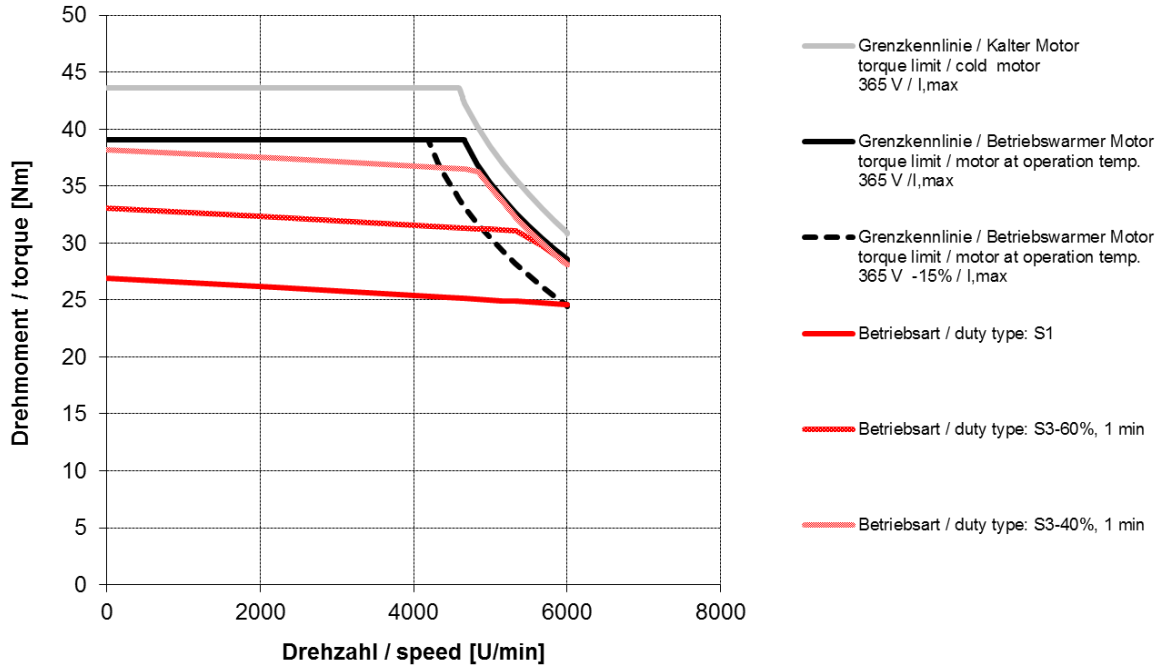

DSP1-100SO64W-40-5

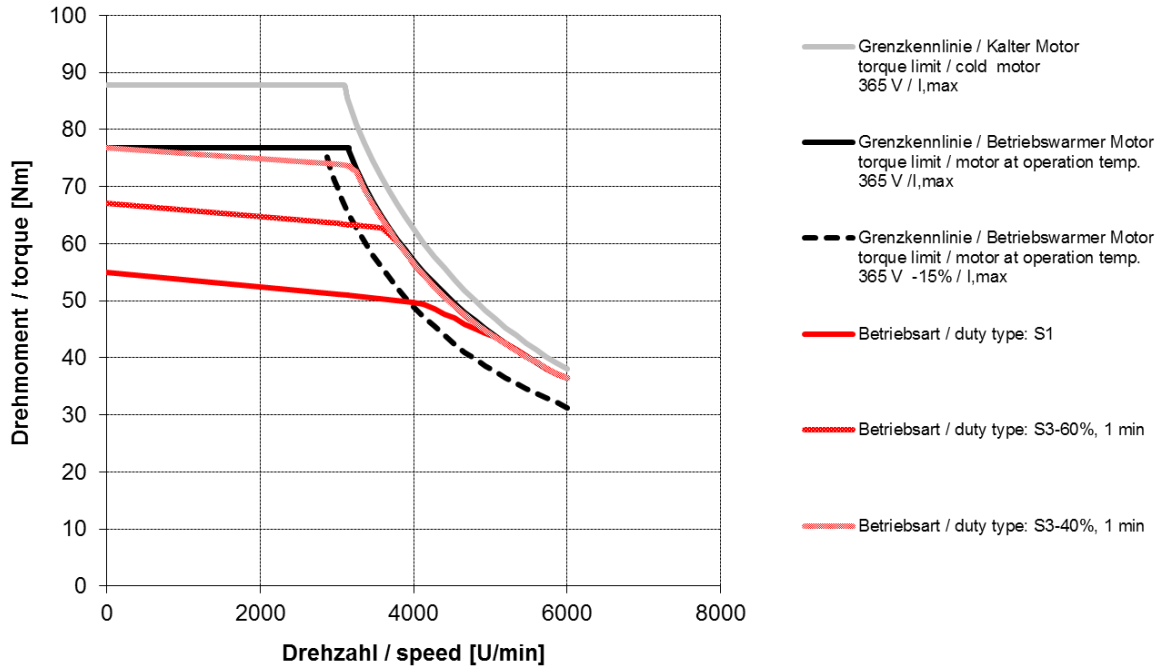

DSP1-100SO64W-60-5

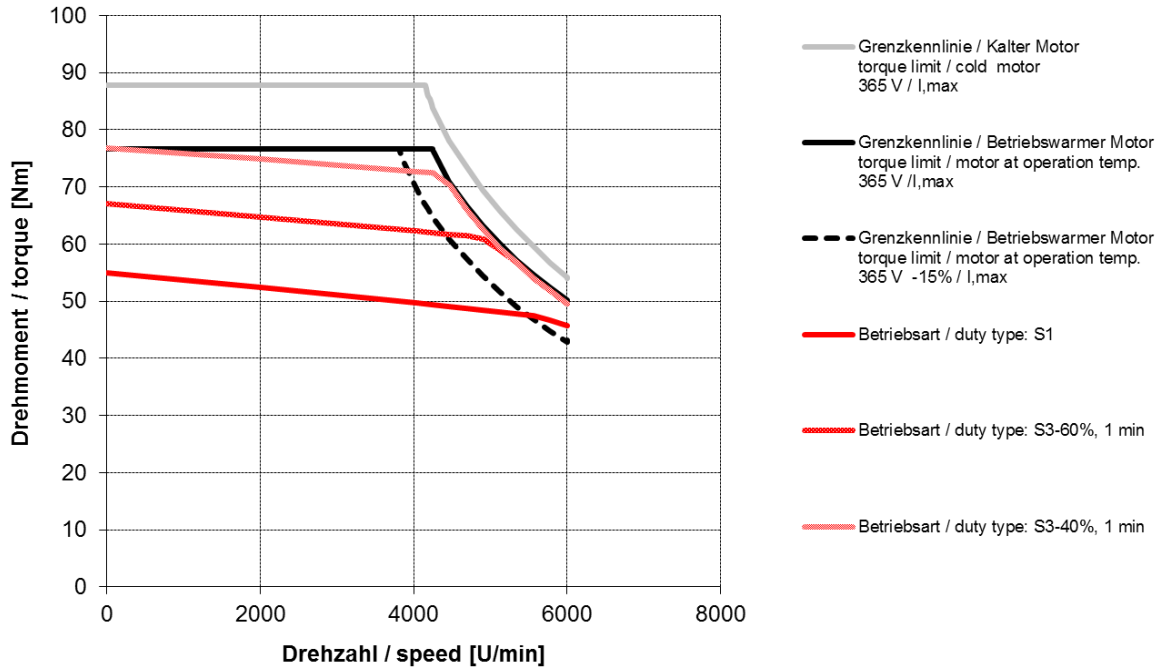

DSP1-100MO64W-30-5

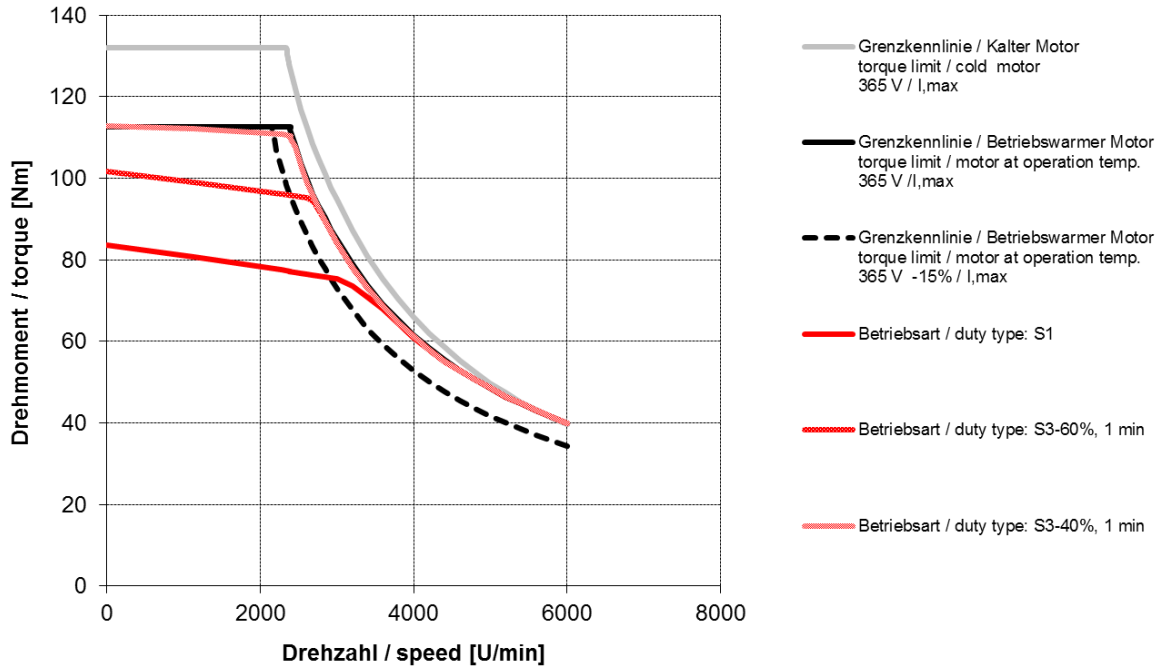

DSP1-100MO64W-40-5

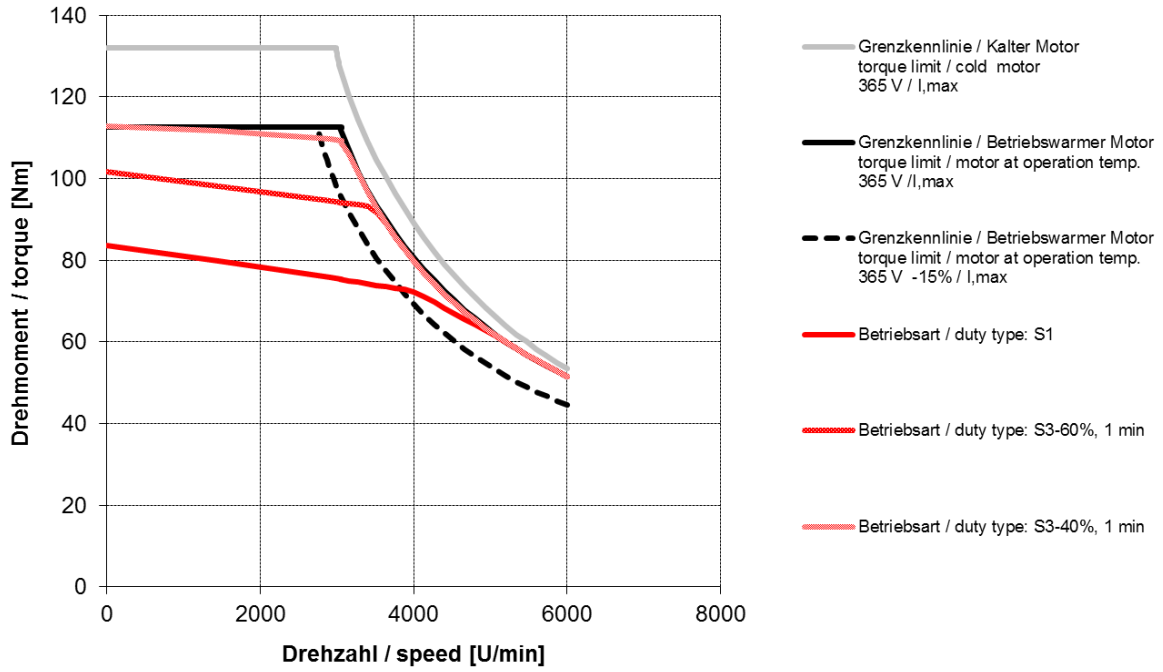

DSP1-100LO64W-10-5

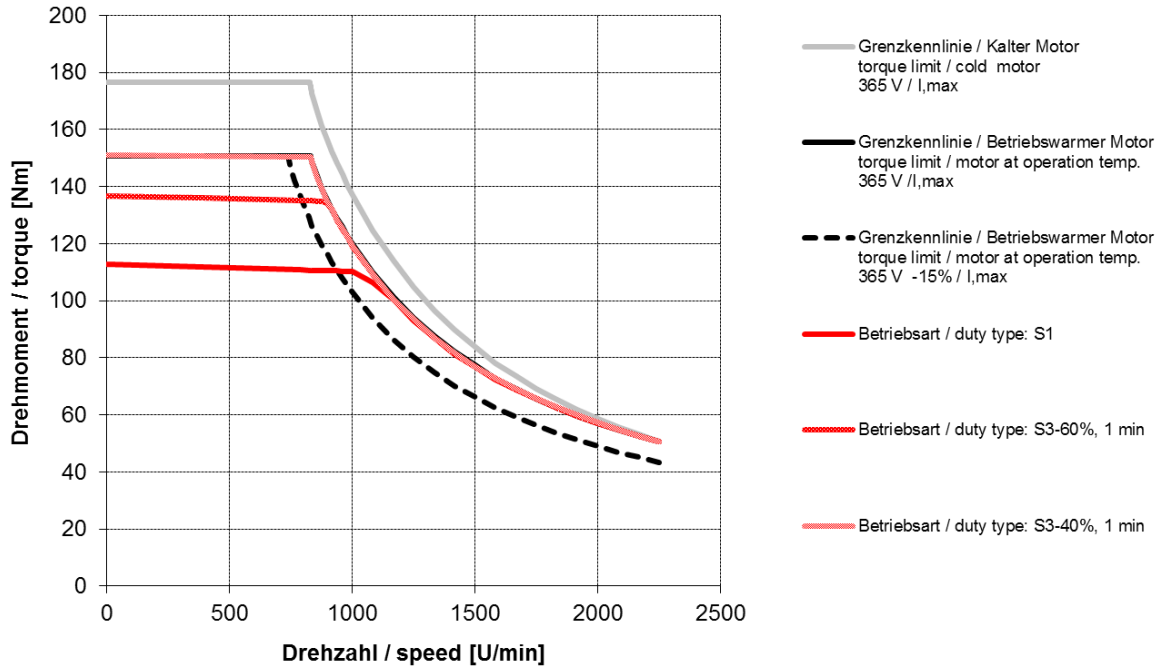

DSP1-100LO64W-20-5

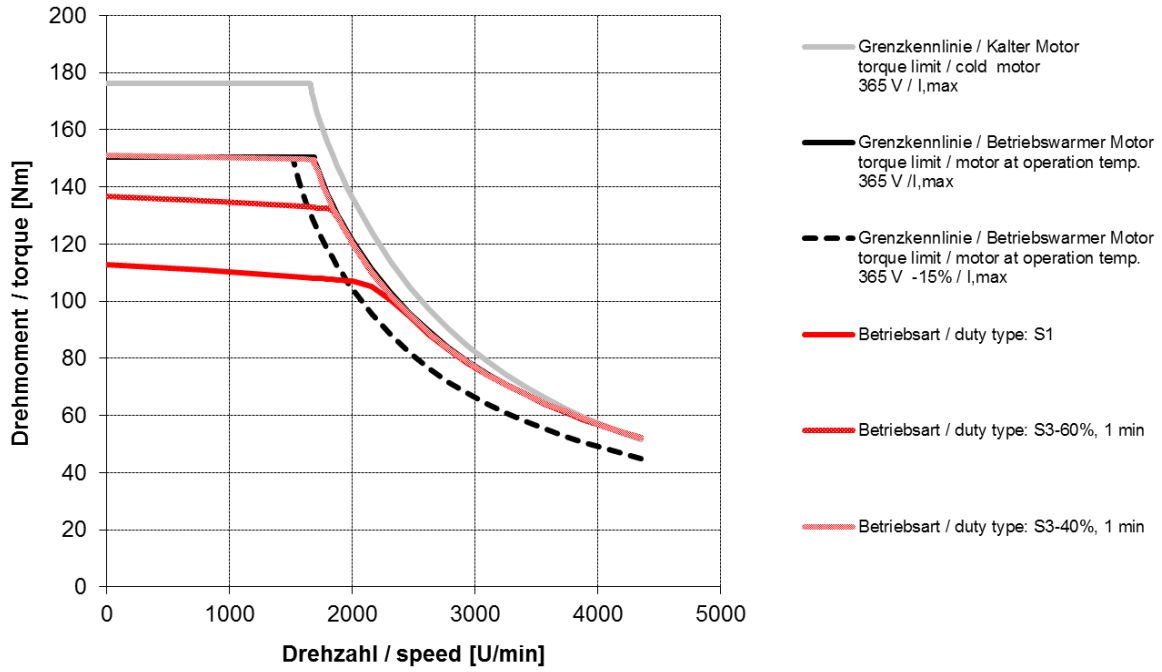

DSP1-100LO64W-30-5

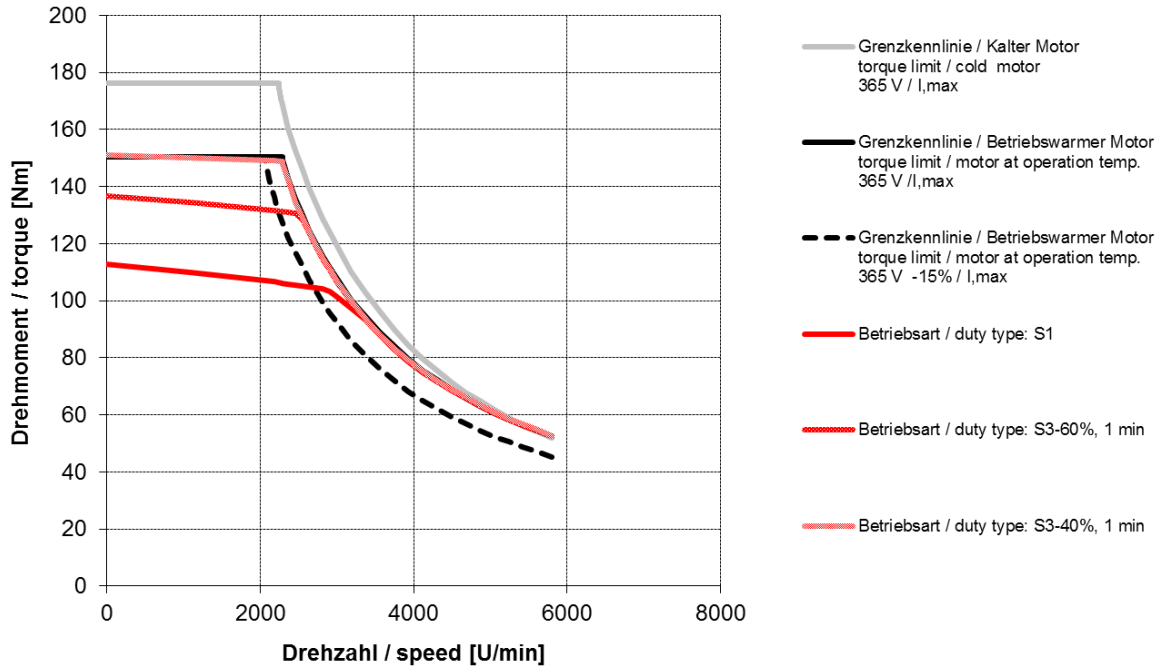

6. Commissioning and maintenance instructions

For information on commissioning the motors. please request a copy of our commissioning and maintenance instructions, number 00746.

7. Declaration of Conformity

7.1. EU – Declaration of Conformity

CE

BAUMÜLLER

EU-Konformitätserklärung
gemäß

- **Richtlinie 2014/35/EU**
  (Niederspannungsrichtlinie)

  Richtlinie 2014/30/EU
  (EMV-Richtlinie)
  ausschließlich mit Geber, wenn im Motor integriert

Hersteller

Baumüller Nürnberg GmbH
Ostendstr. 80 - 90
90482 Nürnberg
Deutschland
Tel. +49 9 11 54 32 - 0
Fax: +49 9 11 54 32 - 1 30
E-Mail: mail@baumueller.de
Internet: www.baumueller.de

Hiermit erklären wir, dass die nachfolgend genannten Produkte aufgrund ihrer Konzeption, Konstruktion und Bauart in der von uns in Verkehr gebrachten Ausführung den Anforderungen der oben genannten Richtlinien einschließlich der zum Zeitpunkt der Erklärung geltenden Änderungen entsprechen.

Hinweise:

1. Bei Umbau oder Änderungen am Produkt verliert diese Erklärung mit sofortiger Wirkung ihre Gültigkeit.

2. Diese Erklärung bescheinigt die Übereinstimmung mit der genannten Richtlinie, stellt aber keine Zusicherung von darüber hinaus gehenden Produkteigenschaften dar.

3. Die alleinige Verantwortung für die Erstellung der Konformitätserklärung trägt der Hersteller.

Angewandte harmonisierte Normen:

- DIN EN 60034-1:2010
  Drehende elektrische Maschinen – Teil 1:
  Bemessung und Betriebsverhalten
- DIN EN 60034-5:2007-09
  Drehende elektrische Maschinen – Teil 5:
  Schutzarten aufgrund der Gesamtkonstruktion von drehenden elektrischen Maschinen (IP-Code) – Einteilung
- DIN EN 60034-6:1996-08
  Drehende elektrische Maschinen – Teil 6:
  Einteilung der Kühlverfahren (IC-Code)

(Wird fortgesetzt auf der nächsten Seite ...)

EU-Declaration of Conformity
according

- **Directive 2014/35/EU**
  (Low-voltage-directive)

  Directive 2014/30/EU
  (EMC-directive)
  only if there is a electronic feedback-device integrated in the motor

Manufacturer

Baumüller Nürnberg GmbH
Ostendstr. 80 - 90
90482 Nürnberg
Germany
Tel. +49 9 11 54 32 - 0
Fax: +49 9 11 54 32 - 1 30
E-Mail: mail@baumueller.de
Internet: www.baumueller.de

We declare, that the products referred to in the following conform in their concept, construction and design as lauched by us to the above mentioned directives and their respective changes which were valid at the point of declaration.

Notes:

1. By modifying or alternating the device(s) this declaration immediately becomes invalid.

2. This declaration confirms the compliance with the directive listed, but it is no covenant of any further product properties.

3. Only the manufacturer is responsible for the declaration of conformity.

Applied harmonised standards:

- DIN EN 60034-1:2010
  Rotating electrical machines – Part 1:
  Rating and performance
- DIN EN 60034-5:2007-09
  Rotating electrical machines – Part 5:
  Degree of protection provided by the integral design of rotating electrical machines (IP-Code) – Classification
- DIN EN 60034-6:1996-08
  Rotating electrical machines – Part 6:
  Methods of cooling (IC-Code)

(To be continued on the next page ...)

(... Fortsetzung von der vorherigen Seite)

- DIN EN 60034-9:2008-01
  Drehende elektrische Maschinen – Teil 9:
  Geräuschgrenzwerte
- DIN EN 60034-14:2008-03
  Drehende elektrische Maschinen – Teil 14:
  Mechanische Schwingungen von bestimmten Maschinen mit einer Achshöhe von 56 mm und höher – Messung, Bewertung und Grenzwerte der Schwingstärke
- DIN EN 61800-5-1:2015
  Elektrische Leistungsantriebssysteme mit einstellbarer Drehzahl – Teil 5-1:
  Anforderungen an die Sicherheit – Elektrische, thermische und energetische Anforderungen
- EN 60204-1:2006+A1:2009
  Sicherheit von Maschinen - Elektrische Ausrüstung von Maschinen - Teil 1:
  Allgemeine Anforderungen

(... continued from the previous page)

- DIN EN 60034-9:2008-01
  Rotating electrical machines – Part 9:
  Noise limits
- DIN EN 60034-14:2008-03
  Rotating electrical machines – Part 14:
  Mechanical vibration of certain machines with shaft heights 56 mm and higher – Measurement, evaluation and limits of vibration severity
- DIN EN 61800-5-1:2015-
  Adjustable speed electrical power drive systems – Part 5-1:
  Safety requirements – Electrical, thermal and energy
- EN 60204-1:2006+A1:2009
  Safety of machinery - Electrical equipment of machines - Part 1:
  General requirements

Produkt / Product	**Jahr der erstmaligen CE-Kennzeichnung / Year of first CE marking**
DSP1-045XXXXX-XX-XX-XXX-XXX-X-XX-X-XXX **DSP1-056XXXXX-XX-XX-XXX-XXX-X-XX-X-XXX** **DSP1-071XXXXX-XX-XX-XXX-XXX-X-XX-X-XXX** **DSP1-100XXXXX-XX-XX-XXX-XXX-X-XX-X-XXX**	**2013**

Nürnberg, 31.05.2016

i.V.

Leiter Entwicklung Motoren
Head of Motor Development

ppa.

Bereichsleiter Motoren
Business Unit Manager Motors

7.2. UKCA Declaration of Conformity

UK CA

BAUMÜLLER

UKCA-Declaration of Conformity according

- **Electrical Equipment Regulation 2016 (Statutory Instrument 2016/1101)**
- **Electromagnetic Compability Regulation 2016 (Statutory Instrument 2016/1091)**

Manufacturer

Baumüller Nürnberg GmbH
Ostendstr. 80 - 90
90482 Nürnberg
Germany
Phone +49 9 11 54 32 - 0
Fax: +49 9 11 54 32 - 1 30
E-Mail: mail@baumueller.de
Internet: www.baumueller.de

Branch office UK

Baumüller (UK) Ltd.
Units 2&3, Aurora Stockport, Baecon Way
SK3 0EF Romiley
United Kingdom
Phone: +44 161 432 78 24
Fax: +44 161 432 8493
E-Mail: mail@baumueller.co.uk
Internet: www.baumueller-services.com/uk

We declare, that the products referred to in the following conform in their concept, construction and design as lauched by us to the above mentioned directives and their respective changes which were valid at the point of declaration.

Notes:

1. *By modifying or alternating the device(s) this declaration immediately becomes invalid.*
2. *This declaration confirms the compliance with the directive listed, but it is no covenant of any further product properties.*
3. *This declaration of conformity is issued under the sole responsibility of the manufacturer.*
4. *responsibility of the manufacturer This motor series isn't in scope of guideline 2005/32/EG*

Applied harmonised standards:

- **BS EN 60034-1:2010**
  Rotating electrical machines – Part 1:
  Rating and performance
- **BS EN 60034-5:2020**
  Rotating electrical machines – Part 5:
  Degrees of protection provided by the integral design of rotating electrical machines (IP code). Classification
- **BS EN 60034-6:1994**
  Rotating electrical machines – Part 6:
  Methods of cooling (IC-Code)
- **BS EN 60034-9:2005**
  Rotating electrical machines – Part 9:
  Noise limits
- **BS EN IEC 60034-14:2018**
  Rotating electrical machines – Part 14:
  Mechanical vibration of certain machines with shaft heights 56 mm and higher. Measurement, evaluation and limits of vibration severity. The following applies to roller bearing motors : Based on EN 60034-14 or requirements according to customer agreement.

(... continued from the previous page)

- **BS EN 61800-5-1:2007 + A11:2021**
  Adjustable speed electrical power drive systems – Part 5-1:
  Safety requirements – Electrical, thermal and energy

- **BS EN 60204-1:2018**
  Safety of machinery - Electrical equipment of machines - Part 1:
  General requirements

Brand Name: Baumüller
Product Name: AC motor

Produkt / Product (x): optionaler Buchstabe / optional character (x, y): alternative Buchstaben oder Zahlen / alternative characters	**Jahr der erstmaligen CE-Kennzeichnung / Year of first CE marking**
DS 3 Phase AC Servomotoren **DS (x)(x)-xxx-x-x-x** **GN(A,F)xxxx(S,M,L)N** **DSC1-XXXXXXXX-XX-XX-XXX-XXX-X-XX-X-XXX** **DSH1-XXXXXXXX-XX-XX-XXX-XXX-X-XX-X-XXX** **DSP1-XXXXXXXX-XX-XX-XXX-XXX-X-XX-X-XXX** **HYG1-XXXXXXXX-XX-XX-XXX-XXX-X-XX-X-XXX** **DS2--XXXXXXXX-XX-XX-XXX-XXX-X-XX-X-XXX** **DSD2-XXXXXXXX-XX-XX-XXX-XXX-X-XX-X-XXX** **DST2-XXXXXXXX-XX-XX-XXX-XXX-X-XX-X-XXX** **DA1- XXXXXXXX-XX-XX-XXX-XXX-X-XX-X-XXX**	**2022**

Nürnberg, 05.04.2022

Dr.-Ing. Michael Wengler
Director

ppa. Matthias Barth
Manager R&D

HOUSE OF AUTOMATION



Baumüller Nürnberg GmbH

Ostendstraße 80 – 90 · 90482 Nürnberg · Germany
Phone: +49 (0) 911 5432 - 0 · Fax: +49 (0) 911 5432 - 130
www.baumueller.com

Alle Angaben in diesem Dokument sind unverbindliche Kundeninformationen, unterliegen einer ständigen Weiterentwicklung und werden fortlaufend durch unseren permanenten Änderungsdienst aktualisiert. Bitte beachten Sie, dass Angaben/Zahlen/Informationen aktuelle Werte zum Druckdatum sind. Zur Ausmessung, Berechnung und Kalkulationen sind diese Angaben nicht rechtlich verbindlich. Bevor Sie in diesem Dokument aufgeführte Informationen zur Grundlage eigener Berechnungen und/oder Verwendungen machen, informieren Sie sich bitte, ob Sie den aktuellsten Stand der Information besitzen. Eine Haftung für die Richtigkeit der Informationen wird daher nicht übernommen.

All data/information and particulars given in this document is non-binding customer information, subject to constant further development and continuously updated by our permanent alteration service. Please note that all particulars/figures/information is current data at the date of printing. These particulars are not legally binding for the purpose of measurement, calculation or cost accounting. Prior to using any of the information contained in this document as a basis for your own calculations and/or applications, please inform yourself about whether the information you have at your disposal is up to date. Therefore, no liability is assumed for the correctness of the information.