BAUMÜLLER

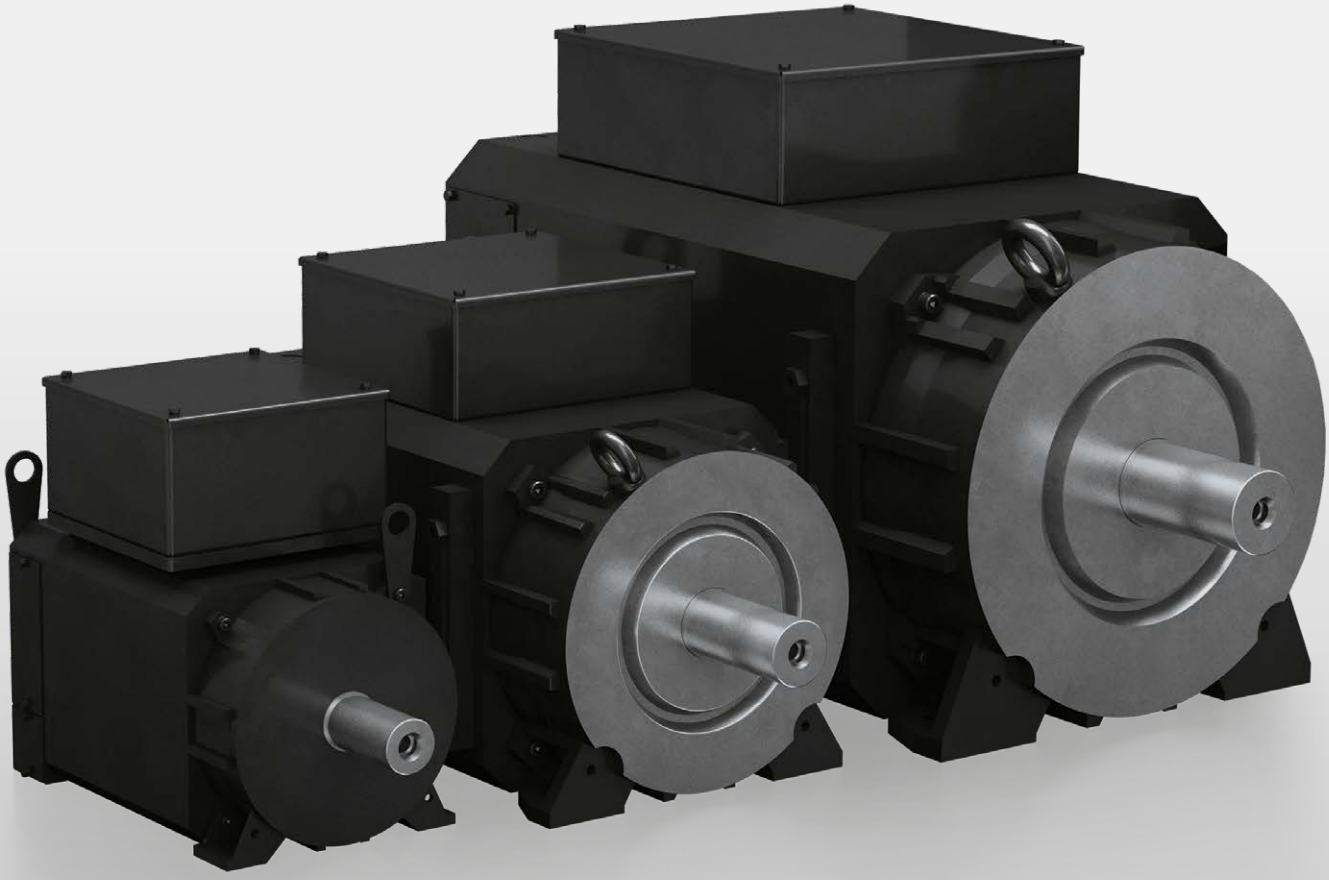

DA1

Technical documentation
Three-phase asynchronous motors DA1 100-280

E 5.23023.01

Technical data, motor components, declaration of conformity

Language **English** (Translation)
Document no. 5.23023.01
Status 11/2023

Table of contents

1. Three-phase asynchronous motor DA1-100 - 280 5

1.1. General technical data 5
1.2. General safety instructions 7
1.3. Definitions of power ratings 8
1.3.1. Definitions of power ratings for air-cooled machines 8
1.3.2. Definitions of power ratings for water-cooled machines 8
1.4. Water cooling 9
1.4.1. Coolant consistency 9
1.4.2. Min. coolant temperature against ambient temperature and humidity 9
1.4.3. Details relating to the amounts of coolant required 11
1.4.4. Materials in the motor that make contact with the medium 11
1.5. Winding insulation 11
1.6. Noise intensity 11
1.7. Type key 12

2. Technical data 15

2.1. Motor data explanations 15
2.2. DA1-100 16
2.2.1. DA1-100..54 I.. (IP 54 surface-cooled) 16
2.2.2. DA1-100..54 W.. (IP 54 water-cooled) 17
2.3. DA1-132 18
2.3.1. DA1-132..23 A/I/R.. (IP 23 internally ventilated) 18
2.3.2. DA1-132..54 A/I/R.. (IP 54 surface-cooled) 19
2.3.3. DA1-132..54 W.. (IP 54 water-cooled) 20
2.4. DA1-160 21
2.4.1. DA1-160..23 A/I/R.. (IP 23 internally ventilated) 21
2.4.2. DA1-160..54 A/I/R.. (IP 54 surface-cooled) 22
2.4.3. DA1-160..54 W.. (IP 54 water-cooled) 23
2.5. DA1-180 24
2.5.1. DA1-180..23 A/I/R.. (IP 23 internally ventilated) 24
2.5.2. DA1-180..54 A/I/R.. (IP 54 surface-cooled) 25
2.5.3. DA1-180..54 W.. (IP 54 water-cooled) 26
2.6. DA1-225 27
2.6.1. DA1-225..23 A(R).. (IP 23 internally ventilated) 27
2.6.2. DA1-225..54 A/I/R.. (IP 54 surface-cooled) 28
2.6.3. DA1-225..54 W.. (IP 54 water-cooled) 29
2.7. DA1-280 30
2.7.1. DA1-280..23 R.. (IP 23 internally ventilated) 30
2.7.2. DA1-280..54 W.. (IP 54 water-cooled) 31
2.8. Vibration load 32
2.9. Bearings and shaft load 33
2.10. Radial force diagrams 34
Diagrams DA1-100 36
Diagrams DA1-132 37
Diagrams DA1-160 39
Diagrams DA1-180 40
Diagrams DA1-225 42
Diagrams DA1-280 43

3. Motor components (options) 45

3.1. Holding brake 45
3.1.1. Brake supply 46
3.1.2. Brake connection 46
3.2. Encoder 47
3.2.1. Resolver 47
3.2.2. Resolvers for safety-related applications 48
3.2.3. SINCOS SRS/SRM 50 (SICK) 49
3.2.4. SINCOS SRS/SRM50-S (SICK) 50

3.2.5. ECN1313/EQN1325 (Heidenhain) 51
3.2.6. ECN1325/EQN1337 (Heidenhain) 52
3.2.7. ECN1325/EQN1337-S (Heidenhain) 53
3.2.8. ERN1320 (Heidenhain) 54
3.2.9. ERN1380 (Heidenhain) 55
3.2.10. ERN1385 (Heidenhain) 56
3.2.11. DFS60 (SICK) 57
3.2.12. Dimensional drawing - socket for encoder and –plug 58
3.3. Encoder cables for b maXX 4000 59
3.3.1. Technical data 59
3.3.2. Application references 60
3.3.3. Order information for encoder cables 61
3.4. Encoder cables for b maXX 5000 62
3.4.1. Technical data 62
3.4.2. Application references 63
3.4.3. Order information for encoder cables 63
3.5. Temperature sensor 64
3.6. Main connection – terminal box 64
3.6.1. Terminal designation 64
3.6.2. Terminal box version 64
3.6.3. Terminal box measures 65
3.6.4. Position terminal boxes and outlet direction main connection 66
3.7. Fan data 67
3.7.1. Standard fan motors 67
3.7.2. Integrated axial blowers 69
3.7.3. Filter 70

4. Dimension drawings 71

4.1. Dimension drawings DA1-100 71
4.2. Dimension drawings DA1-132 72
4.3. Dimension drawings DA1-160 76
4.4. Dimension drawings DA1 180 80
4.5. Dimension drawings DA1-225 84
4.6. Dimension drawings DA1-280 88

5. Commissioning and maintenance instructions 89

6. Declaration of Conformity 90

6.1. EU-Declaration of Conformity 90
6.2. UKCA Declaration of Conformity 92

All the details in this list constitute non-binding customer information. These details are subject to ongoing change and are constantly updated by our editing staff. Please note that all details/figures/information represent current data at the time of going to press. These details are not legally binding for the purposes of dimensioning, computation, or calculation. Before using any of the information listed in this brochure or taking it as the basis for your own calculations, please check that you have the latest version.
For this reason, we cannot accept any liability for the accuracy of the information!

Version 11/2023

1. Three-phase asynchronous motor DA1-100 - 280



Due to the very high power density and huge flexibility achieved by its modular system, this range of motors is ideally suited for the most demanding applications in mechanical engineering. The motors have high speed setting ranges and feature roller bearings to cope with high lateral force loads. These durable, compact motors are also largely maintenance-free, which helps ensure efficient operation. The use of liquid cooling makes for a highly compact design and also reduces noise emissions.

1.1. General technical data

Version	IM B3, B5	Frame size 100 / 132 / 160
	IM B3, B35	Frame size 180 / 225
	IM B3	Frame size 280
Connection	Main connection	U V W (Terminal box)
	Control connection	Speedtec socket 12-pin connector, 17-pin connector with ENDAT interface, 9-pole at EnDat2.2 interface
	Thermal sensor	In the main connection
	Brake	Axial ventilation: Speedtec socket 8-pole
		Radial ventilation or water cooling: Terminal design
Thermal sensor	Linear thermal sensor	PT1000, the evaluation in the controller
Temperature rise	$\Delta\vartheta \leq 105K$	Insulation class F acc. to EN 60034
Environmental conditions for running	Class 3K3/3Z12 as per DIN EN 60721-3-3, however: temperature range 0-40 °C	Represents 0 to 40 °C at 5 % to 85 % rel. humidity and an absolute humidity of 1 g/m³ to 25 g/m³ and an installation height up to approx. 1,400 m.
Environmental conditions for long-term storage	Class 1K2/1M1 DIN EN 60721-3-1, however: temperature range -15-60 °C	Represents -15 to 60 °C at 5 % to 85 % rel. humidity and an absolute humidity of 1 g/m³ to 25 g/m³; at temperatures below 3 °C you should drain the cooling water
Environmental conditions for transport	Class 2K2/2M1 DIN EN 60721-3-2, however: temperature range -15-60 °C	Represents -15 to 60 °C at 5 % to 85 % rel. humidity and an absolute humidity of 1 g/m³ to 25 g/m³; at temperatures below 3 °C you should drain the cooling water
Shaft end	Cylindrical	According to DIN 748 without key
		Centering with internal thread acc. to DIN 332 form D
		Also available with key DIN 6885 as an option
Bearing	D-side	Standard = ball bearing; option = roller bearing
	N-side	Ball bearing, locating bearing
Vibration class	A B	Standard: Accordant to DIN EN60034-14: 2004-09 Option: Size100-160, at bearings only
Concentricity	N R	Standard: Normally accordant to DIN SPEC 42955 issue from 1981*
		Option: Size 100-160, reduced according to DIN SPEC 42955 issue from 1981 (with ball bearing, only)*
Surface	Black matt	RAL 9005
Actual speed encoder	2-pin resolver	Standard – see chapter 3.2
	Sincos Encoder	Option – see chapter 3.2; other encoders on request
Brake	Disk brakes of Baumüller	N-side mounting as a module, other brands on request
Approbations	CE, cULus, UKCA	Standard (cURus not for integrated fans BG160-225)

Technical data for air-cooled motors

Type of protection / cooling method	IP23 / IC06	Internally ventilated with fan
	IP54 / IC641	Surface-cooled with fan
DA1-100	Axial fan on N-side; integrated fan	Air conduction D-side to N-side, axial air outlet at N-side
DA1-132-225	Standard: Standard fan motor for axial ventilation on the N-side;	Air conduction from D-side to N-side, lateral air outlet at N-side
	option: Axially integrated fan on the N-side;	Air conduction from D-side to N-side, lateral air outlet at N-side
	option: Standard fan motor for radial ventilation on the N-side	Air conduction from N-side to D-side, lateral air outlet at D-side
DA1-280	Radial fan at N-side; mounted standard motor	Air conduction from N-side to D-side, lateral air outlet at D-side
Fan motor connection	Mounted standard motor	Terminal box of standard motor
	Integrated fan motor	Speedtec socket 6-pole
Vibration-resistant DA1-100	Radial 0.5 g / axial 0.5 g	10 Hz - 150 Hz acc. to EN 60068-2-6
Vibration-resistant DA1-132-280	Radial 3 g / axial 1 g	10 Hz - 55 Hz acc. to EN 60068-2-6
Terminal box with axial ventilation	N-side	Above; With left and right-hand options
Terminal box with radial ventilation	N-side	Right; With left-hand or above options

Technical data for liquid-cooled motors

Type of protection/cooling method	IP54/ IC3W7	Water-cooled machine
Vibration-resistant DA1-100-280	Radial 3 g / axial 1 g	10 Hz - 55 Hz acc. to EN 60068-2-6
Terminal box	N-side; top	
Coolant input temperature	10 °C to 35 °C	Consider how ambient temperature/humidity can affect the accumulation of condensed water, and how this phenomenon can be avoided.
Water connection	D-side	lateral

*) DIN EN 50347:2003-09 not applicable here, as only valid for AC standard motors

**) If increased vibration loads are present, measurements on site are required.
Based on this, constructive revisions or evaluations are carried out with the company Baumüller

1.2. General safety instructions

The standard versions of the motors are unsuitable for operation in salty or aggressive atmospheres and are not suitable for erection outdoors. If, with an air-cooled motor, the air is contaminated with dust particles or similar substances in the surrounding air, which cannot be kept out efficiently by the filter elements in use, then the a conversation with the manufacturer is necessary to find a solution to the problem.

The reduction of bearing currents requires the consideration of the entire variable speed drive system and the specific installation!
Before commissioning the motor, suitable measures must be taken depending on the application and system to reduce bearing currents. In this case, the motor manufacturer or, in the case of third-party converters, the converter manufacturer must be consulted

By using ring cores, the cause of bearing current damage is reduced, i.e. the amplitude and slope of the common mode voltage at the converter output is reduced. Therefore, the use of cores is a preferred measure. For combinations with mono and axis units of the series bmaXX4xxx/5xxx we basically recommend to use the following ring cores.

For applications **without** active mains rectifier unit bmaXX41xx/51xx:

Motor type	Ring core type	Part number	Core numbers
DA1 160	M113	00432023	2 pieces
DA1 180	M114	00432022	2 pieces
DA1 225	M114	00432022	3 pieces
DA 1 280	M114	00432022	4 pieces

For applications **with** active mains rectifier unit mains unit bmaXX41xx/51xx:

Motor type	Ring core type	Part number	Core number
DA1 160	M683	00434203	3 pieces
DA1 180	M684	00434204	3 pieces
DA1 225	M684	00434204	3 pieces
DA1 280	M684	00434204	4 pieces

When using the ring cores, the three phases **without shielding** and **without PE** must be led through the cores

CAUTION:
With allocation of the motor in a specific protection class, it is a standardized brief test procedure. This can vary considerably depending on the actual environmental conditions at the site of installation.
Depending on the environmental conditions, such as the chemical consistency of the dust materials or the cooling media being used at the site of installation, evaluation of the suitability of the motor based on the type of protection is only possible to a limited extent (e.g. electrically conducting dust materials or aggressive coolant vapors or coolant fluids). In these cases the motor must additionally be protected by appropriate measures on the machine side.

1.3. Definitions of power ratings

1.3.1. Definitions of power ratings for air-cooled machines

The power ratings (torques) listed in the table apply to continuous operation (S1) at the rated speed and a maximum ambient temperature of 40 °C, for machines installed below 1,000 m a.m.s.l.
If motors are to be operated at an ambient temperature of more than 40 °C, or altitudes above 1,000 m a.m.s.l., the required list power rating P_L (list torque M_n) is calculated from the quotient of factors k_1 and k_2 (specified in the table below) and the required power rating P (torque M).

Ambient temperature	40 °C	45 °C	50 °C	55 °C	60 °C
Correction factor k_1	1	1.06	1.13	1.22	1.34
Altitude a.m.s.l. up to	1,000 m	2,000 m	3,000 m	4,000 m	5,000 m
Correction factor k_2	1	1.07	1.16	1.27	1.55

Design changes may be necessary in the case of ambient temperatures above 40 °C and installation of motors in an enclosure: For this reason, it is imperative that the manufacturer is contacted.

If, in the case of an increasing site altitude above 1,000 m, the ambient temperature decreases by approx. 10 °C per 1,000 m increase, no power correction is necessary (note the minimum operating temperature).

1.3.2. Definitions of power ratings for water-cooled machines

The power ratings (torques) that appear in the list apply to permanent operation S1 at nominal speed, provided the cooling circuit requirements for water-cooled motors are met!

The reduction factors included in the table below must be considered when operating DA1-motors with higher coolant inlet temperatures:

Coolant inlet temperature	35 °C	40 °C	45 °C
Percentage of list performance (torque)	100 %	97 %	95 %

1.4. Water cooling

1.4.1. Coolant consistency

Conditions	Unit	Value
Maximum permitted system pressure	bar	6
Temperature of coolant - for motor	° C	10 to 35
pH value (at 20° C)	---	6.5 to 9
Overall hardness	mmol/l	1.43 to 2.5
Chloride - Cl^-	mg/l	< 200
Sulfate - SO_4^{2-}	mg/l	< 200
Oil	mg/l	< 1
Permitted particle size of solid foreign objects, particles (e.g. sand)	mm	< 0.1

Clear, free of suspended matters and dirt-free water must be used as a coolant.
An adequate amount of additive anti-corrosives as well as germ-protection products must be added. The type and addition of the additives depends on the accordant recommendations of the accordant environmental conditions.

1.4.2. Min. coolant temperature against ambient temperature and humidity

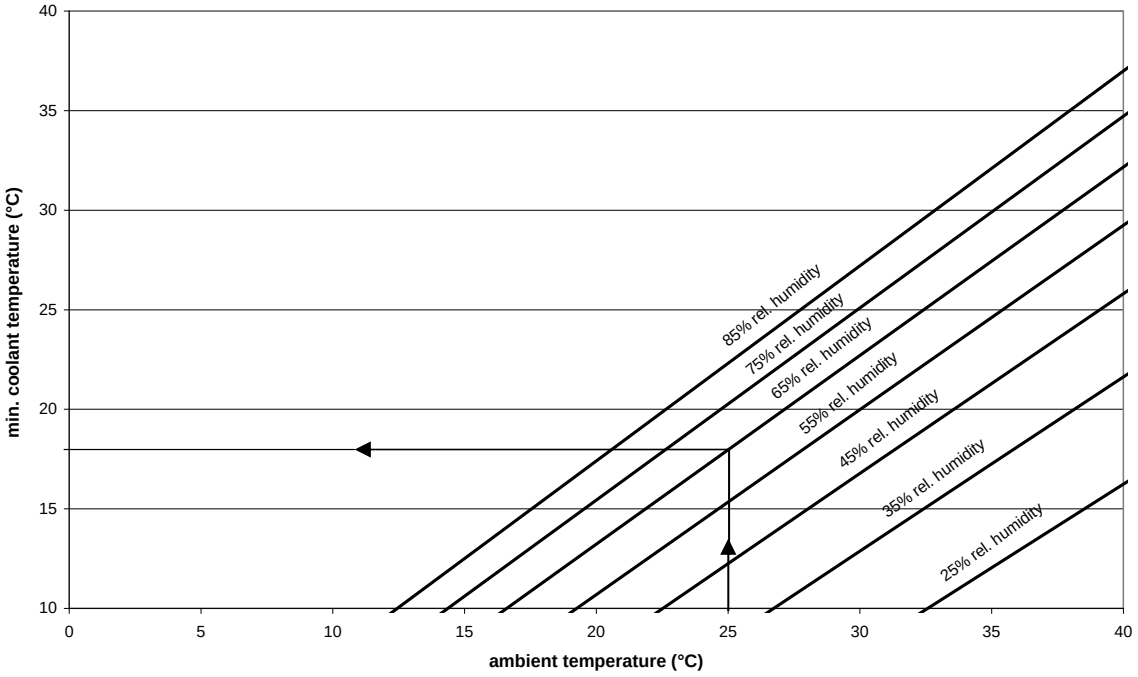

The allowed coolant temperature depends on relative humidity and ambient temperature. For example with an ambient temperature of 25 °C and a relative humidity of 65% the minimum coolant temperature is 18 °C. Because these are limiting values on practical side a coolant temperature greater than 18 °C should be used. If this minimum coolant temperature will be under run the two- point controller of Baumüller drive must be used to avoid condensation.

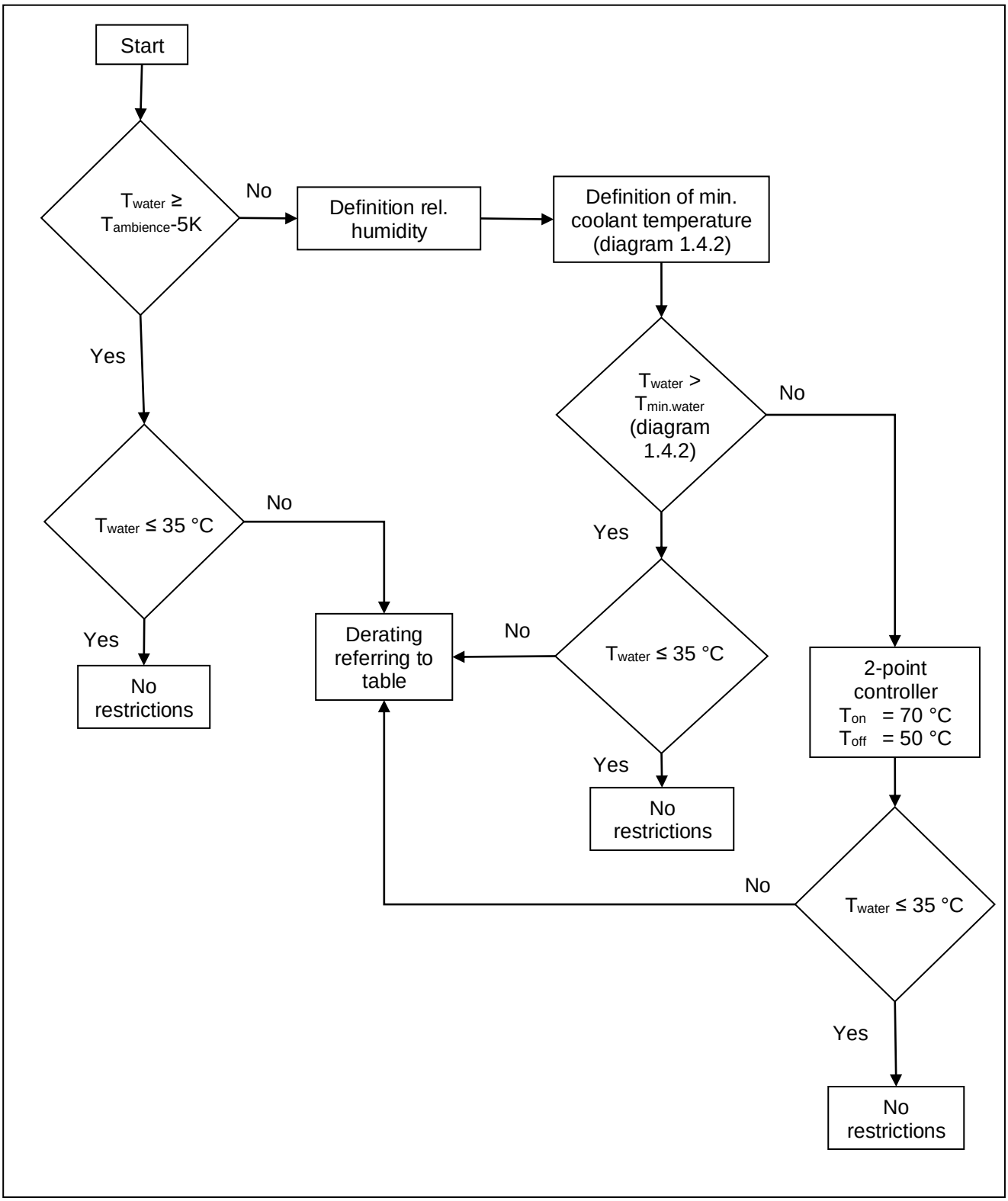

Note:
The supply of cooling fluid must be interrupted to prevent condensation when storing for an extended period. In addition, at ambient temperatures < 3°C and if the motor has not run for an extended period, drain the cooling fluid to prevent damage caused by frost. When using anti-freeze you need to consult the manufacturer.

1.4.3. Details relating to the amounts of coolant required

DA1 frame size	100	132	160	180	225	280
Min. flow rate [l/min]	7 (5)	9 (6.5)	11 (9)	12 (10)	13 (11)	17 (14.5)
Pressure drop [bar]	0.3 ±10 %	0.3 ±10 %	1.1 ±10 %	1.4 ±10 %	2.6 ±10 %	2.6 ±10 %
Max. temperature rise [K]	6 (9)	7 (10)	8 (10)	10 (12)	11 (13)	11 (13)
Max. coolant pressure [bar]	5	5	5	5	5	6
Connection (G-internal thread)	2x 1/2“	2x 1/2“	4x 1/4“	4x 1/4“	4x 1/4“	4x 3/8“

Sufficient quantities of additives for corrosion and germ protection must be mixed in. The additive type and dosage are based on recommendations from the additive manufacturer and the prevailing ambient conditions.

1.4.4. Materials in the motor that make contact with the medium

The following materials that contact the medium are used in the motor:

Size 100-132
Cooling system: Cathodic dip painted aluminum
Connections: Galvanized steel
Seals: NBR seals

Size 160-280:
Cooling system: Stainless steel
Connections: Brass
Seals: Vulcanized fiber

1.5. Winding insulation

The motors are designed for an operation on converters with intermediate link voltages of up to 640V.

Higher intermediate link voltages of up to ≤ 800V are possible, if voltage spikes on the motor terminals are limited to < 1200 V by suitable filters in the motor supply line.

1.6. Noise intensity

The ventilated motors do not exceed the limit values specified in EN 60034.
A converter clock frequency of > 6 kHz is recommended.

Noise level

Motor frame size	Type of protection IP 23	Type of protection IP 54, surface-cooled	Type of protection IP 54, water-cooled
DA1-100	-	73 ± 3 dBA	71 ± 3 dBA
DA1-132	75 ± 3 dBA	74 ± 3 dBA	72 ± 3 dBA
DA1-160	77 ± 3 dBA	76 ± 3 dBA	74 ± 3 dBA
DA1-180	79 ± 3 dBA	78 ± 3 dBA	75 ± 3 dBA
DA1-225	82 ± 3 dBA	80 ± 3 dBA	76 ± 3 dBA
DA1-280	85 ± 3 dBA	-	78 ± 3 dBA

1.7. Type key

DA1-XXXXXXXX-XX-X-XXX-X-XXX-XXX-XX-X-XXX	**Type**
DA1-**XXX**XXXXX-XX-X-XXX-X-XXX-XXX-XX-X-XXX	**Size** 100 132 160 180 225 280
DA1-XXX**XX**XXX-XX-X-XXX-X-XXX-XXX-XX-X-XXX	**Length** KO MO LO BO
DA1-XXXXX**XX**X-XX-X-XXX-X-XXX-XXX-XX-X-XXX	**Protection class** 23 – Protection class IP23 54 – Protection class IP54
DA1-XXXXXXX**X**-XX-X-XXX-X-XXX-XXX-XX-X-XXX	**Cooling method** A - axially fitted external fan I - axially integrated external fan R - radially fitted external fan W – Water cooling
DA1-XXXXXXXX-**XX**-X-XXX-X-XXX-XXX-XX-X-XXX	**Rated speed class** 04 - 400 1/min 06 - 600 1/min 07 - 700 1/min 10 - 1000 1/min 11 - 1100 1/min 12 - 1200 1/min 13 - 1300 1/min 15 - 1500 1/min 17 - 1700 1/min 20 - 2000 1/min 23 - 2300 1/min 25 - 2500 1/min 26 - 2600 1/min 30 - 3000 1/min
DA1-XXXXXXXX-XX-**X**-XXX-X-XXX-XXX-XX-X-XXX	**UDC link_DC** 5 - 540 V 6 - 640V
DA1-XXXXXXXX-XX-X-**X**XX-X-XXX-XXX-XX-X-XXX	**Encoder type** O – without encoder A - Resolver D - SRS50 E - SRM50 F - ECN1313 G - EQN1325

	H - ECN1325 I - EQN1337 M - Resolver (Safety) N - SRS50-S (Safety) Q - SRM50-S (Safety) R - ERN1320 S - ERN1380 T - ERN1385 1 - DFS60 5 - ECN1325-S (Safety) 6 - EQN1337-S (Safety)
DA1-XXXXXXXX-XX-X-X**X**X-X-XXX-XXX-XX-X-XXX	**Brake** O – without brake B - with spring-loaded brake
DA1-XXXXXXXX-XX-X-XX**X**-X-XXX-XXX-XX-X-XXX	**Shaft options** A – smooth shaft B – with key
DA1-XXXXXXXX-XX-X-XXX-**X**-XXX-XXX-XX-X-XXX	**Type** 1 - IM B3 2 - IM B5 7 - IM B35
DA1-XXXXXXXX-XX-X-XXX-X-**X**XX-XXX-XX-X-XXX	**Type main connection** M – Terminal box (with PT1000), signal sockets in Speedtec
DA1-XXXXXXXX-XX-X-XXX-X-X**X**X-XXX-XX-X-XXX	**Position of main connection** T -On top L On the left with view direction to the D-side on WE R – On the right with view direction to the D-side on WE
DA1-XXXXXXXX-XX-X-XXX-X-XX**X**-XXX-XX-X-XXX	**Exit main connection** T - On top B - On the bottom L On the left with view direction to the D-side on WE R - On the right with view direction to the D-side on WE N - NDE (N-side)
DA1-XXXXXXXX-XX-X-XXX-X-XXX-**X**XX-XX-X-XXX	**Bearing*** H –Bearing A-side and with current-insulated bearing on the N-side K - Bearing D-side R – Roller bearing D-side S – Roller bearing D-side and with an optional current-insulated bearing on the N-side *The bearings of the sizes 180-280 are generally current-insulated on the N-side

DA1-XXXXXXXX-XX-X-XXX-X-XXX-X**X**X-XX-X-XXX	**Vibration class** A – Vibration class A B – Vibration class B
DA1-XXXXXXXX-XX-X-XXX-X-XXX-XX**X**-XX-X-XXX	**Concentricity** N - Normal R - Reduced
DA1-XXXXXXXX-XX-X-XXX-X-XXX-XXX-**X**X-X-XXX	**Cooling position** O –without fan T -on the top B -on the bottom L on the left with viewing direction to the D-side on WE R on the right with viewing direction to the D-side on WE A - axial fan C - on the right and on the left with viewing direction to the D-side on WE
DA1-XXXXXXXX-XX-X-XXX-X-XXX-XXX-X**X**-X-XXX	**Option cooling** O - without cooling option (for water cooling) A - without filters (for axial fans) D – Flat filters with filter mats fine G – Rectangular filter with filter mat fine J - Flat filter with filter mat rough M – Rectangular filter with filter mat rough Q - without filter version Δ/Y 265-345V / 460-600V R - Flat filter with filter mat fine version Δ/Y 265-345V / 460-600V S - Flat filter with filter mat rough version Δ/Y 265-345V / 460-600V T - Rectangular filter with filter mat fine version Δ/Y 265-345V / 460-600V U - Rectangular filter with filter mat rough version Δ/Y 265-345V / 460-600V
DA1-XXXXXXXX-XX-X-XXX-X-XXX-XXX-XX-**X**-XXX	**Gearbox mounting/pump mounting** O - without gearbox and pump mounting
DA1-XXXXXXXX-XX-X-XXX-X-XXX-XXX-XX-X-**XXX**	**Special version** 000 - without special version

2. Technical data

2.1. Motor data explanations

n_N	Rated speed (min^{-1})
P_N	Rated power (kW) at rated speed n_N in the continuous operation (S1)
M_N	Rated torque (Nm) at rated speed n_N in the continuous operation (S1)
I_N	Rated effective current (A) at rated speed n_N in the continuous operation (S1)
U_N	Rated voltage (V)
n_1	Limit speed at field weakening (constant power) (min^{-1})
n_{max}	Mechanical maximum permissible operation speed (min^{-1})
cos φ	Power factor
I_μ	Magnetization current (A)
η_N	Efficiency level
f_N	Rated frequency (Hz)
$M_{0,\ max,}$	Maximum static torque (Nm) at Maximum current (A) at a speed = 0
J	Inertia torque rotor inclusively resolver without holding brake (kg m^2)
m	Weight in kg

The specified rated power and torques at the rated speed are reached during the converter operation with a cycle frequency in the power unit of ≥ 4 kHz.A cycle frequency of
> 6 kHz is recommended..
The field weakening option is required at the converters used.

The drive configurator **sizemaXX** on *www.baumueller.com* is provided to design motors and the entire drive system.

2.2. DA1-100

2.2.1. DA1-100..54 I.. (IP 54 surface-cooled)

Mains voltage 3 AC 400 V for converters with uncontrolled supply

n_N	Motortyp	P_N	M_N	I_N	U_N	n_1	n_{max}	cos φ	I_μ	η_N	f_N	Terminal box assignment
min^{-1}		kW	Nm	A	V	min^{-1}	min^{-1}		A		Hz	refer to chapter 3.6
1000	DA1-100KO54I-10-5	3.5	33	9.0	345	2400	8000	0.82	5.2	0.790	35.5	10
	DA1-100MO54I-10-5	5.0	48	13.2	330	3000	8000	0.81	7.8	0.810	35.3	10
	DA1-100LO54I-10-5	6.0	57	15.0	345	2400	8000	0.81	8.5	0.824	35.3	10
	DA1-100BO54I-10-5	7.0	67	18.0	345	2400	8000	0.79	11.1	0.830	35.1	10
1750	DA1-100KO54I-17-5	5.8	32	14.5	335	3500	8000	0.80	7.5	0.849	60.6	10
	DA1-100MO54I-17-5	7.8	43	18.3	350	2600	8000	0.80	9.3	0.866	60.5	10
	DA1-100LO54I-17-5	9.5	52	23.0	345	3000	8000	0.79	12.1	0.874	60.4	10
	DA1-100BO54I-17-5	11.0	60	27.8	335	3500	8000	0.78	15.2	0.878	60.3	12
2300	DA1-100KO54I-23-5	7.2	30	17.0	350	3400	8000	0.81	8.0	0.871	79.0	10
	DA1-100MO54I-23-5	9.6	40	22.2	350	3400	8000	0.80	11.1	0.886	78.7	10
	DA1-100LO54I-23-5	11.0	46	25.5	350	3400	8000	0.80	13.0	0.893	78.6	12
	DA1-100BO54I-23-5	13.0	54	29.0	355	3000	8000	0.82	13.5	0.897	78.7	12
3000	DA1-100KO54I-30-5	8.0	25	19.0	345	4500	8000	0.80	9.3	0.882	102.1	10
	DA1-100MO54I-30-5	11.0	35	25.0	350	4500	8000	0.81	11.9	0.898	102.1	10
	DA1-100LO54I-30-5	13.0	41	31.0	345	5100	8000	0.78	16.4	0.902	101.8	12
	DA1-100BO54I-30-5	15.0	47	35.3	345	5100	8000	0.78	19.0	0.906	101.8	12

Mains voltage 3 AC 480 V for converters with uncontrolled supply

n_N		P_N	M_N	I_N	U_N	n_1	n_{max}	cos φ	I_μ	η_N	f_N	Terminal box assignment refer to chapter
min^{-1}		kW	Nm	A	V	min^{-1}	min^{-1}		A		Hz	3.6
1000	DA1-100KO54I-10-6	3.5	33	7.1	445	2500	4000	0.8	4.1	0.8	35.4	10
	DA1-100MO54I-10-6	5.0	48	10.4	435	3200	4000	0.79	6.1	0.82	35.3	10
	DA1-100LO54I-10-6	6.0	57	11.6	445	2700	4000	0.8	6.6	0.83	35.2	10
	DA1-100BO54I-10-6	7.0	67	14	440	3200	4000	0.78	8.4	0.84	35.1	10
1750	DA1-100KO54I-17-6	5.8	32	11.5	440	3300	8000	0.77	5.9	0.86	60.5	10
	DA1-100MO54I-17-6	7.8	43	15	450	3300	8000	0.79	7.3	0.88	60.4	10
	DA1-100LO54I-17-6	9.5	52	18	435	3700	8000	0.78	9.3	0.88	60.3	10
	DA1-100BO54I-17-6	11.0	60	22	420	4800	8000	0.77	11.7	0.89	60.2	10
2300	DA1-100KO54I-23-6	7.2	30	13	435	4800	8000	0.81	6.3	0.87	78.9	10
	DA1-100MO54I-23-6	9.6	40	19	430	5100	8000	0.78	9.0	0.9	78.7	10
	DA1-100LO54I-23-6	11.0	46	20	440	4400	8000	0.78	10	0.9	78.6	10
	DA1-100BO54I-23-6	13.0	54	23	440	4400	8000	0.8	10.7	0.9	78.7	10
3000	DA1-100KO54I-30-6	8.0	25	16	430	6400	8000	0.77	7.6	0.89	102	10
	DA1-100MO54I-30-6	11.0	35	20	440	5800	8000	0.78	9.3	0.91	102	10
	DA1-100LO54I-30-6	13.0	41	24	445	5200	8000	0.75	13	0.91	101.7	10
	DA1-100BO54I-30-6	15.0	47	29	435	6400	8000	0.75	16	0.9	101.7	12

Motor type	Maximum standstill torque $M_{0\ max}$ [Nm]	Inertia J [kgm^2]	Weight m [kg]
DA1-100KO54I	66	0.017	42
DA1-100MO54I	96	0.023	53
DA1-100LO54I	114	0.029	62
DA1-100BO54I	134	0.034	70

2.2.2. DA1-100..54 W.. (IP 54 water-cooled)

Mains voltage 3 AC 400 V for converters with uncontrolled supply

n_N		P_N	M_N	I_N	U_N	n_1	n_{max}	cos φ	I_μ	η_N	f_N	Terminal box assignment refer to chapter
min^{-1}		kW	Nm	A	V	min^{-1}	min^{-1}		A		Hz	3.6
1000	DA1-100KO54W-10-5	4.5	43	12.4	330	3000	8000	0.83	6.5	0.755	35.8	10
	DA1-100MO54W-10-5	6.5	62	17.2	335	3000	8000	0.84	8.9	0.776	35.8	10
	DA1-100LO54W-10-5	7.8	74	21.0	330	3000	8000	0.81	11.7	0.794	35.5	10
	DA1-100BO54W-10-5	9.0	86	23.5	340	2700	8000	0.80	13.5	0.805	35.4	10
1500	DA1-100KO54W-15-5	6.5	41	16.5	340	2800	8000	0.82	7.4	0.805	52.7	10
	DA1-100MO54W-15-5	9.0	57	23.5	335	3000	8000	0.79	11.9	0.826	52.4	10
	DA1-100LO54W-15-5	11.0	70	28.0	335	3000	8000	0.79	14.3	0.839	52.3	12
	DA1-100BO54W-15-5	13.0	83	32.5	345	2500	8000	0.79	16.8	0.847	52.3	12
2000	DA1-100KO54W-20-5	8.5	41	22.0	330	4000	8000	0.81	10.0	0.835	69.3	10
	DA1-100MO54W-20-5	12.0	57	30.0	330	4000	8000	0.81	13.4	0.853	69.2	12
	DA1-100LO54W-20-5	15.0	72	37.0	340	3800	8000	0.80	17.5	0.863	69.1	12
	DA1-100BO54W-20-5	17.5	84	41.0	350	3000	8000	0.81	18.5	0.870	69.1	12
2500	DA1-100KO54W-25-5	10.0	38	24.5	340	4700	8000	0.81	10.3	0.854	86.0	10
	DA1-100MO54W-25-5	15.0	57	37.0	335	5000	8000	0.80	16.7	0.867	85.9	12
	DA1-100LO54W-25-5	18.5	71	44.0	340	4700	8000	0.81	18.7	0.877	85.9	12
	DA1-100BO54W-25-5	22.0	84	55.0	330	5000	8000	0.80	25.5	0.883	85.7	12
3000	DA1-100KO54W-30-5	11.5	37	28.0	340	5700	8000	0.80	12.0	0.865	102.6	12
	DA1-100MO54W-30-5	17.0	54	40.0	340	5700	8000	0.81	16.2	0.879	102.6	12
	DA1-100LO54W-30-5	21.0	67	49.0	345	5100	8000	0.80	21.5	0.887	102.4	12
	DA1-100BO54W-30-5	25.0	80	57.0	350	4500	8000	0.80	25.5	0.893	102.3	12

Motor type	Maximum standstill torque $M_{0\ max}$ [Nm]	Inertia J [kgm^2]	Weight m [kg]
DA1-100KO54W	69	0.017	41
DA1-100MO54W	99	0.023	51
DA1-100LO54W	118	0.029	60
DA1-100BO54W	138	0.034	68

2.3. DA1-132

2.3.1. DA1-132..23 A/I/R.. (IP 23 internally ventilated)

Mains voltage 3 AC 400 V for converters with uncontrolled supply

n_N		P_N	M_N	I_N	U_N	n_1	n_{max}	cos φ	I_μ	η_N	f_N	Terminal box assignment refer to chapter
min^{-1}		kW	Nm	A	V	min^{-1}	min^{-1}		A		Hz	3.6
1000	DA1-132KO23A/I/R-10-5	15.0	143	38	335	2600	5000	0.82	18.6	0.835	35.0	12
	DA1-132MO23A/I/R-10-5	18.0	172	42	340	2400	5000	0.85	18.6	0.847	35.1	12
	DA1-132LO23A/I/R-10-5	20.0	191	48	345	2200	5000	0.82	23.9	0.862	34.8	12
	DA1-132BO23A/I/R-10-5	22.5	215	57	325	3000	5000	0.81	29.7	0.867	34.8	12
1500	DA1-132KO23A/I/R-15-5	22.0	140	51	350	2300	5000	0.83	20.2	0.869	51.9	12
	DA1-132MO23A/I/R-15-5	26.0	166	60	350	2300	5000	0.82	25.3	0.882	51.7	12
	DA1-132LO23A/I/R-15-5	29.0	185	65	350	2300	5000	0.83	25.5	0.889	51.7	14
	DA1-132BO23A/I/R-15-5	33.0	210	78	335	3000	5000	0.81	33.8	0.895	51.5	14
2000	DA1-132KO23A/I/R-20-5	28.0	134	68	335	4000	5000	0.80	29.5	0.890	68.4	14
	DA1-132MO23A/I/R-20-5	33.0	158	75	350	3000	5000	0.82	30.0	0.900	68.4	14
	DA1-132LO23A/I/R-20-5	37.0	177	84	345	3400	5000	0.82	33.8	0.906	68.3	14
	DA1-132BO23A/I/R-20-5	41.0	196	97	330	4000	5000	0.82	39.7	0.910	68.1	24
3000	DA1-132KO23A/I/R-30-5	36.0	115	82	345	5000	5000	0.81	30.5	0.910	101.7	14
	DA1-132MO23A/I/R-30-5	42.0	134	94	350	4500	5000	0.80	37.0	0.916	101.6	14
	DA1-132LO23A/I/R-30-5	45.0	143	98	355	4000	5000	0.82	36.0	0.922	101.5	24
	DA1-132BO23A/I/R-30-5	50.0	159	108	350	4500	5000	0.83	38.2	0.925	101.5	24

Mains voltage 3 AC 480 V for converters with uncontrolled supply

n_N		P_N	M_N	I_N	U_N	n_1	n_{max}	cos φ	I_μ	η_N	f_N	Terminal box assignment refer to
min^{-1}		kW	Nm	A	V	min^{-1}	min^{-1}		A		Hz	chapter 3.6
1000	DA1-132KO23A/I/R-10-6	15.0	143	29	435	2100	4000	0.82	14.5	0.83	35.1	12
	DA1-132MO23A/I/R-10-6	18.0	172	33	440	1750	4000	0.86	14	0.85	35.1	12
	DA1-132LO23A/I/R-10-6	20.0	191	38	435	2500	4000	0.82	18.5	0.86	34.8	12
	DA1-132BO23A/I/R-10-6	22.5	215	43	430	2700	4000	0.81	22	0.86	34.8	12
1500	DA1-132KO23A/I/R-15-6	22.0	140	40	445	2350	5000	0.82	16	0.87	51.9	12
	DA1-132MO23A/I/R-15-6	26.0	166	48	440	2350	5000	0.81	20	0.88	51.8	12
	DA1-132LO23A/I/R-15-6	29.0	185	52	440	2800	5000	0.82	21	0.89	51.7	12
	DA1-132BO23A/I/R-15-6	33.0	210	61	435	2800	5000	0.81	26	0.89	51.6	14
2000	DA1-132KO23A/I/R-20-6	28.0	134	52	445	3100	5000	0.78	24	0.89	68.4	12
	DA1-132MO23A/I/R-20-6	33.0	158	60	445	3000	5000	0.81	24	0.90	68.4	12
	DA1-132LO23A/I/R-20-6	37.0	177	68	435	3500	5000	0.80	29	0.90	68.2	14
	DA1-132BO23A/I/R-20-6	41.0	196	76	425	3850	5000	0.81	31	0.91	68.2	14
3000	DA1-132KO23A/I/R-30-6	36.0	115	65	430	5000	5000	0.81	25	0.91	101.7	14
	DA1-132MO23A/I/R-30-6	42.0	134	73	450	4000	5000	0.81	28	0.92	101.6	14
	DA1-132LO23A/I/R-30-6	45.0	143	80	430	5000	5000	0.82	30	0.92	101.5	14
	DA1-132BO23A/I/R-30-6	50.0	159	85	440	5000	5000	0.83	31	0.92	101.5	14

Motor type	Maximum standstill torque $M_{0\,max}$ [Nm]	Inertia J [kgm^2]	Weight m [kg]
DA1-132KO23A/I/R	229	0.074	126
DA1-132MO23A/I/R	275	0.090	141
DA1-132LO23A/I/R	306	0.105	156
DA1-132BO23A/I/R	344	0.120	171

2.3.2. DA1-132..54 A/I/R.. (IP 54 surface-cooled)

Mains voltage 3 AC 400 V for converters with uncontrolled supply

n_N		P_N	M_N	I_N	U_N	n_1	n_{max}	cos φ	I_μ	η_N	f_N	Terminal box assignment refer to chapter
min^{-1}		KW	Nm	A	V	min^{-1}	min^{-1}		A		Hz	3.6
1000	DA1-132KO54A/I/R-10-5	10.0	96	26.0	335	2600	5000	0.79	14.6	0.859	34.6	12
	DA1-132MO54A/I/R-10-5	12.0	115	29.0	340	2400	5000	0.82	15.0	0.868	34.6	12
	DA1-132LO54A/I/R-10-5	14.0	134	33.0	340	2400	5000	0.82	17.0	0.877	34.5	12
	DA1-132BO54A/I/R-10-5	16.5	158	40.0	340	2400	5000	0.80	22.3	0.879	34.5	12
1750	DA1-132KO54A/I/R-17-5	16.0	87	39.0	335	3500	5000	0.79	18.4	0.896	59.7	12
	DA1-132MO54A/I/R-17-5	20.0	109	49.5	330	3500	5000	0.79	23.9	0.901	59.6	12
	DA1-132LO54A/I/R-17-5	23.5	128	56.0	335	3500	5000	0.80	26.0	0.907	59.6	12
	DA1-132BO54A/I/R-17-5	26.5	145	64.0	335	3500	5000	0.79	31.5	0.910	59.5	14
2300	DA1-132KO54A/I/R-23-5	20.0	83	47.0	340	4400	5000	0.80	21.3	0.907	78.0	12
	DA1-132MO54A/I/R-23-5	24.0	100	62.0	320	4600	5000	0.78	30.7	0.911	77.8	14
	DA1-132LO54A/I/R-23-5	29.0	120	68.0	340	4400	5000	0.79	32.0	0.917	77.8	14
	DA1-132BO54A/I/R-23-5	32.0	133	73.0	345	4000	5000	0.80	32.3	0.921	77.8	14
3000	DA1-132KO54A/I/R-30-5	23.0	73	58.0	330	5000	5000	0.77	28.2	0.912	101.2	12
	DA1-132MO54A/I/R-30-5	27.0	86	68.0	330	5000	5000	0.77	33.8	0.918	101.1	14
	DA1-132LO54A/I/R-30-5	33.0	105	77.0	340	5000	5000	0.79	34.8	0.925	101.1	14
	DA1-132BO54A/I/R-30-5	37.0	118	85.0	345	5000	5000	0.79	38.3	0.928	101.1	14

Mains voltage 3 AC 480 V for converters with uncontrolled supply

n_N		P_N	M_N	I_N	U_N	n_1	n_{max}	cos φ	I_μ	η_N	f_N	Terminal box assignment refer to chapter
min^{-1}		KW	Nm	A	V	min^{-1}	min^{-1}		A		Hz	3.6
1000	DA1-132KO54A/I/R-10-6	10.0	96	20	430	2000	4000	0.79	9.8	0.85	34.7	10
	DA1-132MO54A/I/R-10-6	12.0	115	23	440	2100	4000	0.81	12	0.87	34.6	10
	DA1-132LO54A/I/R-10-6	14.0	134	26	440	1500	4000	0.81	12	0.87	34.6	12
	DA1-132BO54A/I/R-10-6	16.5	158	31	435	2700	4000	0.8	17	0.88	34.5	12
1750	DA1-132KO54A/I/R-17-6	16.0	87	30	435	4100	5000	0.79	14	0.89	59.7	12
	DA1-132MO54A/I/R-17-6	20.0	109	38	435	3500	5000	0.78	18.5	0.90	59.6	12
	DA1-132LO54A/I/R-17-6	23	126	41	440	3200	5000	0.82	17	0.90	59.7	12
	DA1-132BO54A/I/R-17-6	26.5	145	50	440	3100	5000	0.79	24	0.91	59.5	12
2300	DA1-132KO54A/I/R-23-6	20.0	83	36	440	3900	5000	0.79	16	0.91	78	12
	DA1-132MO54A/I/R-23-6	24.0	100	44	445	3600	5000	0.78	21.5	0.91	77.8	12
	DA1-132LO54A/I/R-23-6	29.0	120	54	430	5000	5000	0.78	26	0.92	77.9	12
	DA1-132BO54A/I/R-23-6	32.0	133	57	440	4300	5000	0.81	24	0.92	78	12
3000	DA1-132KO54A/I/R-30-6	23.0	73	44	435	5000	5000	0.77	21	0.91	101.2	12
	DA1-132MO54A/I/R-30-6	27.0	86	52	425	5000	5000	0.76	26	0.92	101.1	12
	DA1-132LO54A/I/R-30-6	33.0	105	63	425	5000	5000	0.78	30	0.92	101.1	14
	DA1-132BO54A/I/R-30-6	37.0	118	68	435	5000	5000	0.79	31	0.93	101.1	14

Motor type	Maximum standstill torque $M_{0\,max}$ [Nm]	Inertia J [kgm^2]	Weight m [kg]
DA1-132KO54A/I/R	192	0.074	126
DA1-132MO54A/I/R	230	0.090	141
DA1-132LO54A/I/R	268	0.105	156
DA1-132BO54A/I/R	316	0.120	171

2.3.3. DA1-132..54 W.. (IP 54 water-cooled)

Mains voltage 3 AC 400 V for converters with uncontrolled supply

n_N		P_N	M_N	I_N	U_N	n_1	n_{max}	cos φ	I_μ	η_N	f_N	Terminal box assignment refer to chapter
min^{-1}		kW	Nm	A	V	min^{-1}	min^{-1}		A		Hz	3.6
1000	DA1-132KO54W-10-5	11.5	110	30.1	335	2600	5000	0.78	17.0	0.832	34.8	22
	DA1-132MO54W-10-5	13.7	131	36.0	330	3000	5000	0.78	20.7	0.846	34.7	22
	DA1-132LO54W-10-5	16.2	155	43.5	335	2600	5000	0.76	26.5	0.852	34.6	22
	DA1-132BO54W-10-5	18.3	175	45.5	340	2400	5000	0.79	25.5	0.864	34.6	22
1500	DA1-132KO54W-15-5	16.5	105	42.0	320	3000	5000	0.81	18.5	0.869	51.6	22
	DA1-132MO54W-15-5	20.0	127	48.5	340	2800	5000	0.79	22.5	0.879	51.5	22
	DA1-132LO54W-15-5	24.0	153	58.0	340	2800	5000	0.79	28.0	0.885	51.4	22
	DA1-132BO54W-15-5	27.5	175	66.0	345	2500	5000	0.78	33.0	0.890	51.4	24
2000	DA1-132KO54W-20-5	21.5	103	51.0	340	3800	5000	0.80	21.5	0.889	68.3	22
	DA1-132MO54W-20-5	26.5	127	66.0	335	4000	5000	0.77	32.5	0.894	68.1	24
	DA1-132LO54W-20-5	31.0	148	76.0	335	4000	5000	0.78	36.5	0.900	68.1	24
	DA1-132BO54W-20-5	36.0	172	83.0	345	3400	5000	0.80	36.5	0.904	68.1	24
2500	DA1-132KO54W-25-5	25.5	97	59.0	345	4200	5000	0.80	24.5	0.900	84.9	22
	DA1-132MO54W-25-5	31.0	118	73.0	335	5000	5000	0.80	31.5	0.905	84.8	24
	DA1-132LO54W-25-5	37.0	141	89.0	335	5000	5000	0.78	40.5	0.909	84.7	24
	DA1-132BO54W-25-5	43.0	164	99.0	345	4200	5000	0.79	44.0	0.913	84.7	24
3000	DA1-132KO54W-30-5	29.0	92	66.0	350	4500	5000	0.80	26.0	0.906	101.5	24
	DA1-132MO54W-30-5	36.0	115	86.0	335	5000	5000	0.79	36.0	0.911	101.4	24
	DA1-132LO54W-30-5	43.0	137	97.0	345	5000	5000	0.81	38.0	0.915	101.4	24
	DA1-132BO54W-30-5	50.0	159	109.0	355	4000	5000	0.81	44.0	0.919	101.4	24

Motor type	Maximum standstill torque $M_{0\ max}$ [Nm]	Inertia J [kgm^2]	Weight m [kg]
DA1-132KO54W	220	0.074	115
DA1-132MO54W	262	0.090	130
DA1-132LO54W	310	0.105	145
DA1-132BO54W	350	0.120	160

2.4. DA1-160

2.4.1. DA1-160..23 A/I/R.. (IP 23 internally ventilated)

Mains voltage 3 AC 400 V for converters with uncontrolled supply

n_N		P_N	M_N	I_N	U_N	n_1	n_{max}	cos φ	I_μ	η_N	f_N	Terminal box assignment refer to chapter
min^{-1}		kW	Nm	A	V	min^{-1}	min^{-1}		A		Hz	3.6
400	DA1-160KO23A/I/R-04-5	17	406	43	345	1000	4500	0.87	19.2	0.745	14.7	30
	DA1-160MO23A/I/R-04-5	21	501	54	340	1200	4500	0.87	25.2	0.762	14.6	30
	DA1-160LO23A/I/R-04-5	24	573	65	325	1200	4500	0.86	31.5	0.769	14.5	31
1000	DA1-160KO23A/I/R-10-5	40	382	90	345	2500	4500	0.85	38.0	0.870	34.7	32
	DA1-160MO23A/I/R-10-5	48	458	111	335	3000	4500	0.85	49.0	0.882	34.5	32
	DA1-160LO23A/I/R-10-5	56	535	123	345	2500	4500	0.87	50.0	0.885	34.6	32
1500	DA1-160KO23A/I/R-15-5	55	350	120	350	2300	4500	0.85	41.5	0.900	51.5	32
	DA1-160MO23A/I/R-15-5	67	427	147	345	2400	4500	0.83	55.0	0.908	51.3	32
	DA1-160LO23A/I/R-15-5	78	497	170	345	2400	4500	0.85	60.0	0.911	51.3	32
2000	DA1-160KO23A/I/R-20-5	70	334	148	350	3000	4500	0.85	46.0	0.915	68.2	32
	DA1-160MO23A/I/R-20-5	85	406	192	330	4000	4500	0.84	66.0	0.922	68.0	32
	DA1-160LO23A/I/R-20-5	97	463	227	322	4000	4500	0.83	86.0	0.925	67.9	32
3000	DA1-160KO23A/I/R-30-5	87	277	182	350	4500	4500	0.86	47.0	0.929	101.6	32
	DA1-160MO23A/I/R-30-5	103	328	212	350	4500	4500	0.85	55.0	0.934	101.5	32
	DA1-160LO23A/I/R-30-5	120	382	255	345	4500	4500	0.84	82.0	0.938	101.2	34

Mains voltage 3 AC 480 V for converters with uncontrolled supply

n_N		P_N	M_N	I_N	U_N	n_1	n_{max}	cos φ	I_μ	η_N	f_N	Terminal box assignment refer to chapter
min^{-1}		kW	Nm	A	V	min^{-1}	min^{-1}		A		Hz	3.6
400	DA1-160KO23A/I/R-04-6	17	406	36	425	1200	2000	0.88	15.5	0.74	14.7	30
	DA1-160MO23A/I/R-04-6	21	501	43	435	1100	2000	0.86	21	0.76	14.6	30
	DA1-160LO23A/I/R-04-6	24	573	50	420	1200	2000	0.85	24	0.77	14.5	30
1000	DA1-160KO23A/I/R-10-6	40	382	70	440	2100	4500	0.85	30	0.87	34.7	31
	DA1-160MO23A/I/R-10-6	48	458	88	425	3000	4500	0.84	40	0.88	34.6	32
	DA1-160LO23A/I/R-10-6	56	535	103	410	3400	4500	0.86	41.5	0.89	34.6	32
1500	DA1-160KO23A/I/R-15-6	55	350	93	445	2200	4500	0.86	31	0.91	51.5	32
	DA1-160MO23A/I/R-15-6	67	427	120	430	3100	4500	0.83	45	0.91	51.3	32
	DA1-160LO23A/I/R-15-6	78	497	135	440	2800	4500	0.84	47	0.91	51.4	32
2000	DA1-160KO23A/I/R-20-6	70	334	120	440	3200	4500	0.85	37	0.91	68.2	32
	DA1-160MO23A/I/R-20-6	85	406	145	440	3400	4500	0.84	51	0.92	68.0	32
	DA1-160LO23A/I/R-20-6	97	463	165	440	3400	4500	0.84	57	0.93	68.0	32
3000	DA1-160KO23A/I/R-30-6	87	277	153	410	4500	4500	0.86	41	0.93	101.5	32
	DA1-160MO23A/I/R-30-6	103	328	175	425	4500	4500	0.86	46	0.93	101.4	32
	DA1-160LO23A/I/R-30-6	120	382	205	435	4500	4500	0.84	65	0.94	101.2	32

Motor type	Maximum standstill torque $M_{0\ max}$ [Nm]	Inertia J [kgm^2]	Weight m [kg]
DA1-160KO23A/I/R	650	0.245	235
DA1-160MO23A/I/R	802	0.303	270
DA1-160LO23A/I/R	917	0.346	305

2.4.2. DA1-160..54 A/I/R.. (IP 54 surface-cooled)

Mains voltage 3 AC 400 V for converters with uncontrolled supply

n_N		P_N	M_N	I_N	U_N	n_1	n_{max}	cos φ	I_μ	η_N	f_N	Terminal box assignment refer to chapter
min^{-1}		kW	Nm	A	V	min^{-1}	min^{-1}		A		Hz	3.6
400	DA1-160KO54A/I/R-04-5	9.7	232	25.0	345	1000	4500	0.81	14.2	0.801	14.2	30
	DA1-160MO54A/I/R-04-5	11.7	279	31.8	320	1200	4500	0.81	18.3	0.818	14.2	30
	DA1-160LO54A/I/R-04-5	13.5	322	34.0	335	1200	4500	0.82	18.8	0.829	14.2	30
1000	DA1-160KO54A/I/R-10-5	24.0	229	56.0	340	2800	4500	0.81	29.5	0.895	34.3	30
	DA1-160MO54A/I/R-10-5	29.0	277	70.0	345	2500	4500	0.77	41.0	0.902	34.2	31
	DA1-160LO54A/I/R-10-5	33.0	315	73.0	345	2500	4500	0.83	36.0	0.909	34.2	31
1350	DA1-160KO54A/I/R-13-5	30.0	212	67.0	350	2100	4500	0.81	30.0	0.912	46.0	31
	DA1-160MO54A/I/R-13-5	37.0	262	89.0	330	2700	4500	0.80	42.6	0.917	45.9	32
	DA1-160LO54A/I/R-13-5	44.0	311	102.0	335	2500	4500	0.81	46.2	0.921	45.9	32
1750	DA1-160KO54A/I/R-17-5	38.0	207	89.0	335	3300	4500	0.81	39.4	0.921	59.3	32
	DA1-160MO54A/I/R-17-5	47.0	256	100.0	350	2700	4500	0.84	38.7	0.927	59.4	32
	DA1-160LO54A/I/R-17-5	53.0	289	113.0	350	2700	4500	0.84	43.0	0.930	59.4	32
2300	DA1-160KO54A/I/R-23-5	46.0	191	108.0	335	4300	4500	0.80	49.0	0.929	77.6	32
	DA1-160MO54A/I/R-23-5	57.0	237	127.0	345	3700	4500	0.81	55.0	0.934	77.6	32
	DA1-160LO54A/I/R-23-5	65.0	270	150.0	330	4500	4500	0.81	65.0	0.937	77.5	32
3000	DA1-160KO54A/I/R-30-5	55.0	175	121.0	350	4500	4500	0.81	50.5	0.935	101.0	32
	DA1-160MO54A/I/R-30-5	67.0	213	146.0	345	4500	4500	0.83	56.0	0.938	101.0	32
	DA1-160LO54A/I/R-30-5	75.0	239	175.0	335	4500	4500	0.80	79.0	0.939	100.8	32

Mains voltage 3 AC 480 V for converters with uncontrolled supply

n_N		P_N	M_N	I_N	U_N	n_1	n_{max}	cos φ	I_μ	η_N	f_N	Terminal box assignment refer to chapter
min^{-1}		kW	Nm	A	V	min^{-1}	min^{-1}		A		Hz	3.6
400	DA1-160KO54A/I/R-04-6	9.7	232	19	445	1600	2000	0.81	11.2	0.8	14.2	30
	DA1-160MO54A/I/R-04-6	11.7	279	24	425	1500	2000	0.82	11.7	0.82	14.2	30
	DA1-160LO54A/I/R-04-6	13.5	322	27	430	1600	2000	0.82	14.4	0.83	14.2	30
1000	DA1-160KO54A/I/R-10-6	24.0	229	45	430	3000	4500	0.81	24	0.89	34.3	30
	DA1-160MO54A/I/R-10-6	29.0	277	56	425	4000	4500	0.78	32	0.90	34.2	30
	DA1-160LO54A/I/R-10-6	33.0	315	58	430	2900	4500	0.84	27	0.91	34.2	30
1350	DA1-160KO54A/I/R-13-6	30.0	212	53	440	2900	4500	0.81	24	0.91	46.0	30
	DA1-160MO54A/I/R-13-6	37.0	262	67	435	2900	4500	0.80	32	0.92	45.9	31
	DA1-160LO54A/I/R-13-6	44.0	311	82	415	3700	4500	0.81	36	0.92	46.0	32
1750	DA1-160KO54A/I/R-17-6	38.0	207	66	440	3000	4500	0.81	29	0.92	59.3	31
	DA1-160MO54A/I/R-17-6	47.0	256	80	435	3100	4500	0.84	31	0.93	59.4	31
	DA1-160LO54A/I/R-17-6	52.0	284	87	440	2900	4500	0.85	32	0.93	59.4	32
2300	DA1-160KO54A/I/R-23-6	46.0	191	83	430	4500	4500	0.79	38	0.93	77.6	32
	DA1-160MO54A/I/R-23-6	57.0	237	95	445	3400	4500	0.83	37	0.93	77.7	32
	DA1-160LO54A/I/R-23-6	65.0	270	110	445	3400	4500	0.83	41	0.94	77.6	32
3000	DA1-160KO54A/I/R-30-6	55.0	175	105	415	4500	4500	0.80	44	0.93	100.9	32
	DA1-160MO54A/I/R-30-6	67.0	213	120	420	4500	4500	0.83	46	0.94	101.0	32
	DA1-160LO54A/I/R-30-6	75.0	239	140	420	4500	4500	0.78	63	0.95	100.8	32

Motor type	Maximum standstill torque $M_{0\ max}$ [Nm]	Inertia J [kgm^2]	Weight m [kg]
DA1-160KO54A/I/R	464	0.245	235
DA1-160MO54A/I/R	558	0.303	270
DA1-160LO54A/I/R	644	0.346	305

2.4.3. DA1-160..54 W.. (IP 54 water-cooled)

Mains voltage 3 AC 400 V for converters with uncontrolled supply

n_N		P_N	M_N	I_N	U_N	n_1	n_{max}	cos φ	I_μ	η_N	f_N	Terminal box assignment refer to chapter
in^{-1}		kW	Nm	A	V	min^{-1}	min^{-1}		A		Hz	3.6
1000	DA1-160KO54W-10-5	26	248	59	345	2500	4500	0.82	28.5	0.882	34.5	30
	DA1-160MO54W-10-5	32	306	72	345	2500	4500	0.83	35.0	0.892	34.4	31
	DA1-160LO54W-10-5	37	353	85	340	3000	4500	0.83	42.0	0.896	34.4	32
1500	DA1-160KO54W-15-5	38	242	86	345	2400	4500	0.81	36.5	0.905	51.3	32
	DA1-160MO54W-15-5	47	299	105	345	2400	4500	0.83	43.5	0.912	51.2	32
	DA1-160LO54W-15-5	55	350	118	355	2200	4500	0.82	49.5	0.915	51.2	32
2000	DA1-160KO54W-20-5	48	229	100	350	3000	4500	0.85	36.0	0.920	68.0	32
	DA1-160MO54W-20-5	60	287	131	345	3500	4500	0.83	54.0	0.925	67.9	32
	DA1-160LO54W-20-5	70	334	153	350	3000	4500	0.82	66.0	0.928	67.8	32
2500	DA1-160KO54W-25-5	58	222	127	345	4500	4500	0.81	53.0	0.928	84.5	32
	DA1-160MO54W-25-5	72	275	149	355	3500	4500	0.84	56.0	0.932	84.5	32
	DA1-160LO54W-25-5	82	313	176	350	4000	4500	0.82	74.0	0.935	84.4	32
3000	DA1-160KO54W-30-5	65	207	141	345	4500	4500	0.82	58.0	0.933	101.2	32
	DA1-160MO54W-30-5	80	255	169	350	4500	4500	0.83	66.0	0.936	101.1	32
	DA1-160LO54W-30-5	92	293	210	325	4500	4500	0.83	85.0	0.938	101.1	32

Motor type	Maximum standstill torque $M_{0\,max}$ [Nm]	Inertia J [kgm^2]	Weight m [kg]
DA1-160KO54W	496	0.245	235
DA1-160MO54W	612	0.303	275
DA1-160LO54W	706	0.346	310

2.5. DA1-180

2.5.1. DA1-180..23 A/I/R.. (IP 23 internally ventilated)

Mains voltage 3 AC 400 V for converters with uncontrolled supply

n_N		P_N	M_N	I_N	U_N	n_1	n_{max}	cos φ	I_μ	η_N	f_N	Terminal box assignment refer to chapter
min^{-1}		kW	Nm	A	V	min^{-1}	min^{-1}		A		Hz	3.6
400	DA1-180MO23A/I/R-04-5	30	716	74	345	1200	4300	0.88	29.8	0.773	14.5	40
	DA1-180LO23A/I/R-04-5	40	955	101	335	1200	4300	0.86	46.5	0.795	14.4	40
1000	DA1-180MO23A/I/R-10-5	70	669	159	345	1700	4300	0.84	55.6	0.880	34.6	40
	DA1-180LO23A/I/R-10-5	90	860	219	330	2000	4300	0.81	94.0	0.894	34.4	40
1500	DA1-180MO23A/I/R-15-5	96	611	214	340	2900	4300	0.83	74.3	0.912	51.2	40
	DA1-180OL23A/I/R-15-5	125	796	291	330	3000	4300	0.82	112.0	0.920	51.0	43
2000	DA1-180MO23A/I/R-20-5	120	573	288	330	4000	4300	0.82	105.0	0.927	67.8	43
	DA1-180LO23A/I/R-20-5	152	726	345	335	4000	4300	0.82	126.0	0.932	67.7	43
3000	DA1-180MO23A/I/R-30-5	155	493	330	350	4300	4300	0.82	104.0	0.942	101.1	43
	DA1-180LO23A/I/R-30-5	200	637	425	350	4300	4300	0.82	142.0	0.946	101.0	45

Mains voltage 3 AC 480 V for converters with uncontrolled supply

n_N		P_N	M_N	I_N	U_N	n_1	n_{max}	cos φ	I_μ	η_N	f_N	Terminal box assignment refer to chapter
min^{-1}		kW	Nm	A	V	min^{-1}	min^{-1}		A		Hz	3.6
400	DA1-180MO23A/I/R-04-6	30	716	60	420	1100	2000	0.91	24	0.75	14.6	40
	DA1-180LO23A/I/R-04-6	40	955	80	420	1200	2000	0.85	38	0.79	14.4	40
1000	DA1-180MO23A/I/R-10-6	70	669	125	445	2200	4300	0.83	44	0.88	34.6	40
	DA1-180LO23A/I/R-10-6	90	860	170	420	2400	4300	0.81	72	0.90	34.4	40
1500	DA1-180MO23A/I/R-15-6	96	611	167	440	2500	4300	0.83	58	0.83	51.2	40
	DA1-180LO23A/I/R-15-6	125	796	210	450	2900	4300	0.84	72	0.92	51.1	40
2000	DA1-180MO23A/I/R-20-6	120	573	205	445	3000	4300	0.81	75	0.93	67.8	40
	DA1-180LO23A/I/R-20-6	152	726	275	415	4300	4300	0.82	98	0.93	67.7	43
3000	DA1-180MO23A/I/R-30-6	155	493	260	440	4300	4300	0.83	85	0.94	101.1	43
	DA1-180LO23A/I/R-30-6	200	637	325	445	4300	4300	0.85	91	0.94	101.1	43

Motor type	Maximum standstill torque $M_{0\ max}$ [Nm]	Inertia J [kgm^2]	Weight m [kg]
DA1-180MO23A/I/R	1146	0.515	350
DA1-180LO23A/I/R	1528	0.676	430

2.5.2. DA1-180..54 A/I/R.. (IP 54 surface-cooled)

Mains voltage 3 AC 400 V for converters with uncontrolled supply

n_N		P_N	M_N	I_N	U_N	n_1	n_{max}	cos φ	I_μ	η_N	f_N	Terminal box assignment refer to chapter
min^{-1}		kW	Nm	A	V	min^{-1}	Min^{-1}		A		Hz	3.6
400	DA1-180MO54A/I/R-04-5	16	382	39.5	335	1200	4300	0.84	20.0	0.830	14.1	40
	DA1-180LO54A/I/R-04-5	20	478	49.5	340	1200	4300	0.81	27.0	0.852	14.0	40
1000	DA1-180MO54A/I/R-10-5	38	363	89.0	335	2000	4300	0.82	39.0	0.907	34.2	40
	DA1-180LO54A/I/R-10-5	50	478	107.0	350	1500	4300	0.84	42.0	0.915	34.2	40
1350	DA1-180MO54A/I/R-13-5	52	368	125.0	335	2700	4300	0.79	60.0	0.921	45.8	40
	DA1-180LO54A/I/R-13-5	68	481	142.0	350	2100	4300	0.86	49.0	0.925	45.9	40
1750	DA1-180MO54A/I/R-17-5	63	344	137.0	345	3000	4300	0.83	52.0	0.932	59.2	40
	DA1-180LO54A/I/R-17-5	85	464	192.0	330	3500	4300	0.82	78.0	0.936	59.1	40
2300	DA1-180MO54A/I/R-23-5	75	311	179.0	320	4300	4300	0.80	76.0	0.938	77.4	40
	DA1-180LO54A/I/R-23-5	100	415	224.0	335	4300	4300	0.82	92.0	0.942	77.4	40
3000	DA1-180MO54A/I/R-30-5	87	277	210.0	320	4300	4300	0.80	88.0	0.940	100.7	40
	DA1-180LO54A/I/R-30-5	105	334	261.0	315	4300	4300	0.80	115.0	0.940	100.6	43

Mains voltage 3 AC 480 V for converters with uncontrolled supply

n_N		P_N	M_N	I_N	U_N	n_1	n_{max}	cos φ	I_μ	η_N	f_N	Terminal box assignment refer to chapter
min^{-1}		kW	Nm	A	V	min^{-1}	Min^{-1}		A		Hz	3.6
400	DA1-180MO54A/I/R-04-6	16	382	31	430	1400	2000	0.83	16	0.84	14.1	40
	DA1-180LO54A/I/R-04-6	20	478	39	425	1800	2000	0.80	22	0.86	14.0	40
1000	DA1-180MO54A/I/R-10-6	38	363	70	430	2200	4300	0.80	31	0.91	34.2	40
	DA1-180LO54A/I/R-10-6	50	478	88	435	2000	4300	0.83	35	0.92	34.2	40
1350	DA1-180MO54A/I/R-13-6	52	368	100	420	3500	4300	0.77	49	0.93	45.8	40
	DA1-180LO54A/I/R-13-6	68	481	110	445	2100	4300	0.85	36	0.93	46.0	40
1750	DA1-180MO54A/I/R-17-6	63	344	107	440	2800	4300	0.82	40	0.94	59.2	40
	DA1-180LO54A/I/R-17-6	82	447	135	450	2500	4300	0.83	50	0.94	59.2	40
2300	DA1-180MO54A/I/R-23-6	75	311	128	450	3300	4300	0.80	53	0.94	77.5	40
	DA1-180LO54A/I/R-23-6	100	415	180	425	4300	4300	0.80	73	0.95	77.4	40
3000	DA1-180MO54A/I/R-30-6	87	277	165	410	4300	4300	0.78	72	0.95	100.7	40
	DA1-180LO54A/I/R-30-6	105	334	195	425	4300	4300	0.79	85	0.95	100.6	40

Motor type	Maximum standstill torque $M_{0\ max}$ [Nm]	Inertia J [kgm^2]	Weight m [kg]
DA1-180MO54A/I/R	764	0.515	330
DA1-180LO54A/I/R	956	0.676	425

2.5.3. DA1-180..54 W.. (IP 54 water-cooled)

Mains voltage 3 AC 400 V for converters with uncontrolled supply

n_N		P_N	M_N	I_N	U_N	n_1	n_{max}	cos φ	I_μ	η_N	f_N	Terminal box assignment refer to chapter
min^{-1}		kW	Nm	A	V	min^{-1}	min^{-1}		A		Hz	3.6
1000	DA1-180MO54W-10-5	40	382	92	335	2000	4300	0.82	44	0.909	34.1	40
	DA1-180LO54W-10-5	57	544	132	335	2000	4300	0.82	66	0.913	34.1	40
1500	DA1-180MO54W-15-5	60	382	130	350	2300	4300	0.83	49	0.924	51.0	40
	DA1-180LO54W-15-5	84	535	180	350	2300	4300	0.84	66	0.928	50.9	40
2000	DA1-180MO54W-20-5	76	363	166	350	3000	4300	0.81	71	0.932	67.5	40
	DA1-180LO54W-20-5	105	501	255	315	4000	4300	0.80	113	0.935	67.5	43
2500	DA1-180MO54W-25-5	92	351	197	355	3500	4300	0.81	81	0.937	84.2	40
	DA1-180LO54W-25-5	122	466	248	360	3000	4300	0.83	89	0.940	84.2	43
3000	DA1-180MO54W-30-5	102	325	235	340	4300	4300	0.79	103	0.937	100.8	40
	DA1-180LO54W-30-5	135	430	312	340	4300	4300	0.79	141	0.940	100.7	43

Motor type	Maximum standstill torque $M_{0\ max}$ [Nm]	Inertia J [kgm^2]	Weight m [kg]
DA1-180MO54W	764	0.515	330
DA1-180LO54W	1088	0.676	435

2.6. DA1-225

2.6.1. DA1-225..23 A(R).. (IP 23 internally ventilated)

Mains voltage 3 AC 400 V for converters with uncontrolled supply

n_N		P_N	M_N	I_N	U_N	n_1	n_{max}	cos φ	I_μ	η_N	f_N	Terminal box assignment refer to chapter
min^{-1}		kW	Nm	A	V	Min^{-1}	min^{-1}		A		Hz	3.6
400	DA1-225KO23A/I/R-04-5	50	1194	118	340	1200	3800	0.86	49.5	0.830	14.0	41
	DA1-225MO23A/I/R-04-5	65	1552	153	340	1200	3800	0.85	69.0	0.847	14.0	41
	DA1-225LO23A/I/R-04-5	78	1862	179	340	1200	3800	0.86	74.0	0.856	13.9	41
1000	DA1-225KO23A/I/R-10-5	115	1098	243	350	1500	3800	0.86	74.0	0.908	34.2	41
	DA1-225MO23A/I/R-10-5	147	1404	315	345	1700	3800	0.85	105.0	0.919	34.0	50
	DA1-225LO23A/I/R-10-5	176	1681	373	350	1500	3800	0.84	128.0	0.925	34.0	50
1500	DA1-225KO23A/I/R-15-5	160	1019	371	325	3000	3800	0.83	129.0	0.930	50.7	50
	DA1-225MO23A/I/R-15-5	205	1305	449	340	2800	3800	0.83	163.0	0.937	50.6	50
1750	DA1-225KO23A/I/R-17-5	176	960	366	350	2700	3800	0.85	102.0	0.933	59.2	50
	DA1-225MO23A/I/R-17-5	217	1184	446	345	3000	3800	0.87	106.0	0.938	59.1	50
	DA1-225LO23A/I/R-17-5	265	1446	567	345	3000	3800	0.83	205.0	0.946	58.9	52
2000	DA1-225KO23A/I/R-20-5	195	931	436	335	3800	3800	0.82	153.0	0.939	67.4	50
	DA1-225MO23A/I/R-20-5	240	1146	558	320	3800	3800	0.82	196.0	0.944	67.3	52
2500	DA1-225MO23A/I/R-25-5	260	993	529	345	3800	3800	0.87	132.0	0.947	84.1	52
3000	DA1-225KO23A/I/R-30-5	240	764	508	345	3800	3800	0.84	170.0	0.946	100.7	52

Mains voltage 3 AC 480 V for converters with uncontrolled supply

n_N		P_N	M_N	I_N	U_N	n_1	n_{max}	cos φ	I_μ	η_N	f_N	Terminal box assignment refer to chapter
min^{-1}		kW	Nm	A	V	Min^{-1}	min^{-1}		A		Hz	3.6
400	DA1-225KO23-A/I/R04-6	50	1194	92	440	900	2000	0.87	37	0.83	14.1	41
	DA1-225MO23A/I/R-04-6	65	1552	120	445	900	2000	0.85	51	0.85	14.0	41
	DA1-225LO23A/I/R-04-6	78	1862	142	435	1000	2000	0.86	58	0.86	13.9	41
1000	DA1-225KO23A/I/R-10-6	115	1098	200	440	1500	3800	0.85	60	0.91	34.2	41
	DA1-225MO23A/I/R-10-6	147	1404	270	405	2400	3800	0.84	93	0.92	34.0	50
	DA1-225LO23A/I/R-10-6	176	1681	315	420	2200	3800	0.84	108	0.93	34.0	50
1500	DA1-225KO23A/I/R-15-6	160	1019	265	450	2000	3800	0.83	88	0.93	50.8	50
	DA1-225MO23A/I/R-15-6	205	1305	360	425	3200	3800	0.82	130	0.94	50.7	50
1750	DA1-225KO23A/I/R-17-6	176	960	295	440	2800	3800	0.83	100	0.94	59.1	50
	DA1-225MO23A/I/R-17-6	217	1184	355	435	2900	3800	0.87	85	0.94	59.1	50
	DA1-225LO23A/I/R-17-6	265	1446	430	450	2200	3800	0.85	134	0.94	59.0	50
2000	DA1-225KO23A/I/R-20-6	195	931	350	430	3800	3800	0.80	135	0.94	67.4	50
	DA1-225MO23A/I/R-20-6	240	1146	415	440	3500	3800	0.81	162	0.95	67.3	50
2500	DA1-225KO23A/I/R-25-6	220	840	410	420	3800	3800	0.79	168	0.95	84.0	50
	DA1-225MO23A/I/R-25-6	260	993	405	455	3000	3800	0.87	91	0.95	84.1	50
3000	DA1-225KO23A/I/R-30-6	240	764	385	455	3700	3800	0.84	119	0.95	100.7	50

Motor type	Maximum standstill torque $M_{0\ max}$ [Nm]	Inertia J [kgm^2]	Weight m [kg]
DA1-225KO23A/I/R	1910	1.313	610
DA1-225MO23A/I/R	2483	1.710	710
DA1-225LO23A/I/R	2979	2.063	800

2.6.2. DA1-225..54 A/I/R.. (IP 54 surface-cooled)

Mains voltage 3 AC 400 V for converters with uncontrolled supply

n_N		P_N	M_N	I_N	U_N	n_1	n_{max}	cos φ	I_μ	η_N	f_N	Terminal box assignment refer to chapter
min^{-1}		kW	Nm	A	V	min^{-1}	min^{-1}		A		Hz	3.6
400	DA1-225KO54A/I/R-04-5	27	645	70	325	1200	3800	0.79	40.0	0.867	13.8	41
	DA1-225MO54A/I/R-04-5	36	860	90	330	1200	3800	0.80	51.0	0.882	13.8	41
	DA1-225LO54A/I/R-04-5	43	1027	103	335	1200	3800	0.80	57.0	0.891	13.7	41
1000	DA1-225KO54A/I/R-10-5	64	611	150	330	2000	3800	0.80	70.0	0.929	33.8	41
	DA1-225MO54A/I/R-10-5	87	831	205	325	2000	3800	0.81	92.0	0.935	33.8	41
	DA1-225LO54A/I/R-10-5	107	1022	250	325	2000	3800	0.82	107.0	0.938	33.8	41
1350	DA1-225KO54A/I/R-13-5	85	580	193	330	2700	3800	0.80	88.0	0.941	45.5	41
	DA1-225MO54A/I/R-13-5	110	778	236	345	2300	3800	0.83	96.0	0.945	45.5	41
	DA1-225LO54A/I/R-13-5	135	955	299	340	2600	3800	0.81	128.0	0.947	45.4	50
1750	DA1-225KO54A/I/R-17-5	98	535	221	335	3500	3800	0.81	95.0	0.946	58.8	41
	DA1-225MO54A/I/R-17-5	130	709	280	345	3000	3800	0.82	112.0	0.950	58.8	50
	DA1-225LO54A/I/R-17-5	157	857	375	315	3500	3800	0.81	161.0	0.952	58.7	50
2300	DA1-225KO54A/I/R-23-5	112	465	257	330	3800	3800	0.81	107.0	0.948	77.1	41
	DA1-225MO54A/I/R-23-5	143	594	333	325	3800	3800	0.80	144.0	0.951	77.1	50
	DA1-225LO54A/I/R-23-5	175	727	362	340	3800	3800	0.86	110.0	0.954	77.2	50
3000	DA1-225KO54A/I/R-30-5	122	388	252	350	3800	3800	0.85	73.0	0.952	100.6	41
	DA1-225MO54A/I/R-30-5	155	493	328	335	3800	3800	0.86	98.0	0.952	100.5	50

Mains voltage 3 AC 480 V for converters with uncontrolled supply

n_N		P_N	M_N	I_N	U_N	n_1	n_{max}	cos φ	I_μ	η_N	f_N	Terminal box assignment refer to chapter
min^{-1}		kW	Nm	A	V	min^{-1}	min^{-1}		A		Hz	3.6
400	DA1-225KO54A/I/R-04-6	27	645	55	420	1600	2000	0.78	33	0.87	13.8	41
	DA1-225MO54A/I/R-04-6	36	860	70	430	1500	2000	0.78	41	0.88	13.8	41
	DA1-225LO54A/I/R-04-6	43	1027	77	445	900	2000	0.82	40	0.89	13.8	41
1000	DA1-225KO54A/I/R-10-6	64	611	110	445	1500	3800	0.81	48	0.93	33.8	41
	DA1-225MO54A/I/R-10-6	87	831	155	435	2200	3800	0.80	71	0.93	33.8	41
	DA1-225LO54A/I/R-10-6	107	1022	180	445	1700	3800	0.83	72	0.94	33.8	41
1350	DA1-225KO54A/I/R-13-6	85	601	150	440	2600	3800	0.79	70	0.94	45.5	41
	DA1-225MO54A/I/R-13-6	110	778	200	430	3100	3800	0.78	95	0.94	45.4	41
	DA1-225LO54A/I/R-13-6	135	955	240	435	3300	3800	0.79	110	0.95	45.4	41
1750	DA1-225KO54A/I/R-17-6	95	518	220	445	2800	3800	0.83	59	0.94	58.8	41
	DA1-225MO54A/I/R-17-6	130	709	225	430	3800	3800	0.82	89	0.95	58.8	41
	DA1-225LO54A/I/R-17-6	157	857	280	425	3800	3800	0.80	123	0.95	58.7	50
2300	DA1-225KO54A/I/R-23-6	112	465	205	440	3800	3800	0.76	102	0.95	77.1	41
	DA1-225MO54A/I/R-23-6	143	594	250	440	3800	3800	0.79	111	0.95	77.1	41
	DA1-225LO54A/I/R-23-6	175	727	270	455	3100	3800	0.86	78	0.95	77.2	50
3000	DA1-225KO54A/I/R-30-6	122	388	200	435	3800	3800	0.86	57	0.95	100.6	41
	DA1-225MO54A/I/R-30-6	155	493	245	450	3800	3800	0.86	71	0.95	100.5	41

Motor type	Maximum standstill torque $M_{0\ max}$ [Nm]	Inertia J [kgm^2]	Weight m [kg]
DA1-225KO54A/I/R	1290	1.313	610
DA1-225MO54A/I/R	1720	1.710	710
DA1-225LO54A/I/R	2054	2.063	800

2.6.3. DA1-225..54 W.. (IP 54 water-cooled)

Mains voltage 3 AC 400 V for converters with uncontrolled supply

n_N		P_N	M_N	I_N	U_N	n_1	n_{max}	cos φ	I_μ	η_N	f_N	Terminal box assignment refer to chapter
min^{-1}		kW	Nm	A	V	min^{-1}	min^{-1}		A		Hz	3.6
1000	DA1-225KO54W-10-5	68	649	161	325	2000	3800	0.81	71	0.926	33.9	41
	DA1-225MO54W-10-5	95	907	223	330	2000	3800	0.80	100	0.932	33.8	41
	DA1-225LO54W-10-5	120	1146	278	330	2000	3800	0.80	123	0.935	33.8	50
1500	DA1-225KO54W-15-5	97	618	208	350	2300	3800	0.81	85	0.940	50.6	41
	DA1-225MO54W-15-5	135	860	326	320	3000	3800	0.80	146	0.944	50.5	50
1750	DA1-225KO54W-17-5	108	589	244	340	3200	3800	0.80	107	0.943	58.9	41
	DA1-225MO54W-17-5	148	808	313	360	2300	3800	0.80	133	0.948	58.8	50
	DA1-225LO54W-17-5	185	1010	430	330	3500	3800	0.79	194	0.948	58.8	50
2000	DA1-225KO54W-20-5	120	573	300	310	3800	3800	0.79	137	0.943	67.2	50
	DA1-225MO54W-20-5	162	774	410	310	3800	3800	0.78	196	0.947	67.1	50
	DA1-225LO54W-20-5	205	979	423	355	3000	3800	0.82	162	0.952	67.2	50
2500	DA1-225KO54W-25-5	135	516	280	360	3200	3800	0.82	108	0.948	83.8	50
	DA1-225MO54W-25-5	185	707	388	355	3500	3800	0.81	153	0.951	83.8	50
3000	DA1-225KO54W-30-5	150	478	360	330	3800	3800	0.78	164	0.946	100.4	50

Motor type	Maximum standstill torque $M_{0\ max}$ [Nm]	Inertia J [kgm^2]	Weight m [kg]
DA1-225KO54W	1298	1.313	600
DA1-225MO54W	1796	1.710	710
DA1-225LO54W	2292	2.063	810

2.7. DA1-280

2.7.1. DA1-280..23 R.. (IP 23 internally ventilated)

Mains voltage 3 AC 400 V for converters with uncontrolled supply

n_N		P_N	M_N	I_N	U_N	n_1	n_{max}	cos φ	I_μ	η_N	f_N	Terminal box assignment refer to chapter
min^{-1}		kW	Nm	A	V	min^{-1}	min^{-1}		A		Hz	3.6
750	DA1-280KO23R-07-5	158	2012	340	350	1250	3000	0.84	120.6	0.923	25.5	50
700	DA1-280MO23R-07-5	193	2633	395	365	700	3000	0.83	145.6	0.930	23.8	50
650	DA1-280LO23R-06-5	222	3262	475	350	1150	3000	0.83	178.0	0.929	22.1	54
1050	DA1-280KO23R-10-5	235	2137	500	350	1750	3000	0.83	176.0	0.938	35.5	54
1050	DA1-280MO23R-10-5	290	2638	600	355	1500	3000	0.83	218.6	0.945	35.5	54
1200	DA1-280LO23R-12-5	380	3024	765	365	1200	3000	0.83	287.4	0.951	40.4	54
1350	DA1-280KO23R-13-5	290	2051	610	350	2200	3000	0.83	216.1	0.947	45.5	54
1500	DA1-280MO23R-15-5	390	2483	775	365	1500	3000	0.83	275.9	0.954	50.5	54
2000	DA1-280KO23R-20-5	400	1910	775	380	3000	3000	0.82	283.2	0.959	67.1	54

Motor type	Maximum standstill torque $M_{0\,max}$ [Nm]	Inertia J [kgm^2]	Weight m [kg]
DA1-280KO23R	3200	3.300	1170
DA1-280MO23R	4200	4.200	1370
DA1-280LO23R	5200	5.100	1570

2.7.2. DA1-280..54 W.. (IP 54 water-cooled)

Mains voltage 3 AC 400 V for converters with uncontrolled supply

n_N		P_N	M_N	I_N	U_N	n_1	n_{max}	cos φ	I_μ	η_N	f_N	Terminal box assignment refer to chapter
min^{-1}		kW	Nm	A	V	min^{-1}	min^{-1}		A		Hz	3.6
750	DA1-280KO54W-07-5	82	1044	160	365	750	3000	0.88	40	0.930	25.5	50
750	DA1-280MO54W-07-5	125	1592	255	345	1200	3000	0.89	61.6	0.933	25.5	50
750	DA1-280LO54W-07-5	155	1974	298	365	750	3000	0.89	72.8	0.937	25.5	50
1100	DA1-280KO54W-11-5	120	1042	230	365	1100	3000	0.88	56.6	0.946	37.1	50
1100	DA1-280MO54W-11-5	175	1519	345	350	1500	3000	0.88	85.8	0.946	37.1	50
1150	DA1-280LO54W-11-5	230	1910	445	360	1300	3000	0.88	107.3	0.950	38.8	54
1500	DA1-280KO54W-15-5	160	1019	310	360	1500	3000	0.87	84.6	0.953	50.4	50
1500	DA1-280MO54W-15-5	220	1401	415	365	1500	3000	0.88	102.4	0.953	50.5	50
1600	DA1-280LO54W-16-5	295	1761	560	360	1600	3000	0.88	142.8	0.956	53.8	54
2000	DA1-280KO54W-20-5	200	955	380	365	2000	3000	0.88	99.8	0.954	67.1	50
2000	DA1-280MO54W-20-5	280	1337	535	365	2000	3000	0.87	140.7	0.958	67.1	54
2600	DA1-280KO54W-26-5	255	937	495	360	3000	3000	0.87	138.2	0.955	87.1	54

Motor type	Maximum standstill torque $M_{0\ max}$ [Nm]	Inertia J [kgm^2]	Weight m [kg]
DA1-280KO54W	2100	3.300	1250
DA1-280MO54W	3200	4.200	1470
DA1-280LO54W	3950	5.100	1700

2.8. Vibration load

The vibration behavior of the entire system at the place of use, caused by output elements, mounting conditions, alignment and installation as well as by influences of external vibrations, can lead to an increase in the vibration values at the motor.
Under certain circumstances, it may be necessary to completely balance the rotor with the output element.
In order to be able to guarantee perfect function and service life, the specified vibration values based on DIN ISO 10816 are not to be exceeded at the specified measuring points of the motor (refer to figure "Measuring points for vibration measurement").

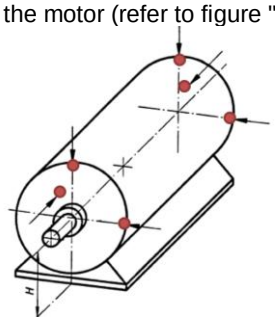

Figure: Measuring points for vibration measurement

The specified maximum radial and axial vibration values have to be adhered to simultaneously. They apply to substructures that can be described as elastic. An elastic substructure is present if the lowest natural frequency of the total system (machine and foundation) in the measuring direction is at least 25% below the essential excitation frequency. All other substructures can be described as rigid. In the case of rigid substructures, please consult the manufacturer.

Maximum radial vibration load:

Peak vibrational acceleration 1 g	> 250 Hz
Peak vibration displacement ≤ 0.16 mm	< 6.3 Hz
Effect. Vibrational speed ≤ 4.5 mm/s	6.3 Hz – 250 Hz

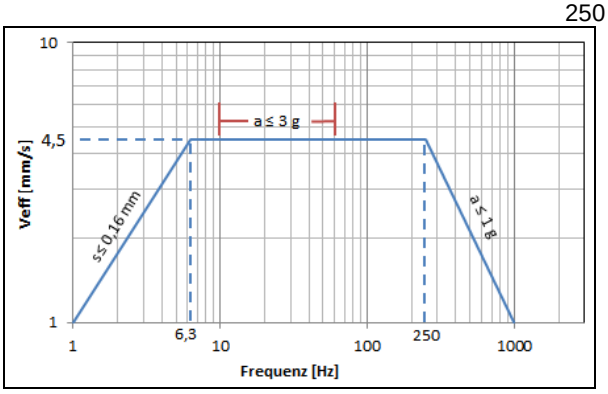

Figure: Permissible radial vibration load

Maximum axial vibration load:

Peak vibrational acceleration 0.225 g	> 55 Hz
Peak vibration displacement ≤ 0.16 mm	< 6.3 Hz
Effective vibrational speed ≤ 4.5 mm/s	6.3 Hz – 55 Hz

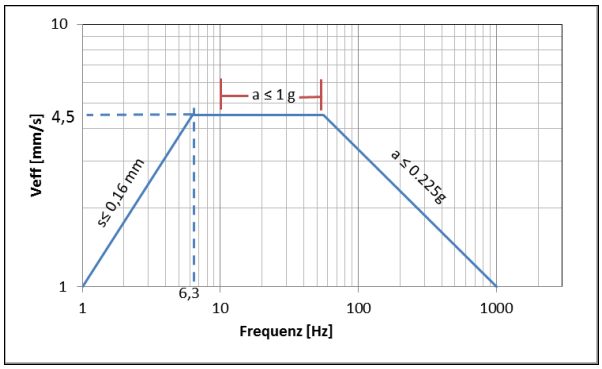

Figure: Permissible axial vibration load

Additional vibration resistance:

Vibrational acceleration 3 g radial and 1g axial 10 Hz to 55 Hz

The specified vibrations are additionally resisted by the motor. However, the service life of wear parts (such as bearings) can be reduced.

Shock stress:

If there are increased vibration loads in form of shocks, measurements on the machine are required. Based on this, constructive revisions and evaluations are carried out with the company Baumüller.

To evaluate the vibration speed, the measuring equipment shall meet the requirements of ISO 2954. The vibration acceleration shall be evaluated in the time range in the frequency band from 10 Hz to 2 kHz. If significant vibration excitations above 2 kHz are to be expected, such as tooth mesh frequencies the measuring range must be adapted accordingly. Consequently, the permissible maximum values do not change.

2.9. Bearings and shaft load

All machines are equipped with rolling-contact bearings. Normally, the non-locating bearing (ball bearing) is intended for the drive end and the locating bearing (ball bearing) for the non-drive end. Machines with roller bearings at the drive end are available for applications where increased radial forces can occur, for instance when using pulleys. Please specify radial forces in your order.

Ball bearing assignment for D-side

Frame size	D-side	N-side
100	6209 2ZRC3	6306 2ZRC3
132	6312 2ZRC3	6310 2ZRC3
160	6313 2ZRC3	6311 2ZRC3
180	6314 2ZRC3	6312 2ZRC3
225	6316 2ZRC3	6314 2ZRC3
280	6220 C3	6220 C3

Roller bearing assignment for D-side

Frame size	D-side	N-side
100	NU 209 E	6306 2ZRC3
132	NU 312 E	6310 2ZRC3
160	NU 313 E	6311 2ZRC3
180	NU 314 E	6312 2ZRC3
225	NU 316 E	6314 2ZRC3

The bearings at motor size 100-225 have a permanent lubrication.
The bearings at motor size 280 provide a relubrication feature device.

The bearings at motor size 180-280 are on the N-side in insulated version by default.

NOTE:
In the option "roller bearings for D-side" the rotor is secured by default with a transport lock. The transport lock must be fixed during the transport and must first be removed before reassembling a driven element.
If the machine will be transport after mounting of a driven element, a suitable method for the axial and radial fixation of the rotor must are taken.

Determination of radial forces F_R

When using pulleys, the radial load is calculated according to the following formula:

$$F_R = k \frac{2 \cdot 10^7 \cdot P_N}{n \cdot D} \text{ [N]}$$

P_N = Nominal power in kW
n = Nominal speed in rpm
D = Pulley diameter in mm

The belt tightening factor k is approximately:
k = 1.8...2.5 for V-belt
k = 2.2…3.5 for flat belt
(Observe specifications of the belt manufacturer)

To ensure safe and reliable torque transmission, it is necessary to utilize the entire bearing length of the key. Otherwise, the key may be subjected to an excessive compressive load per unit area, which in turn can result in the failure of the motor. The pulley must be mounted up to the shaft shoulder and only tightened to the following maximum tightening torques.

Gland	M5	M6	M8	M10	M12	M16	M20
Tightening torque	2.2 Nm	4.0 Nm	10.0 Nm	19.0 Nm	33.0 Nm	80 Nm	160 Nm

Permissible radial forces F_R at the shaft end

The ball bearings have been dimensioned for a calculated service life of approx. 20,000 operating hours [1)]. The load values specified below must not be exceeded. The specified permissible radial forces F_R are only valid for horizontal mounting of the motor without additional axial forces. If additional axial forces are involved, please consult the manufacturer.

Axial load on the motor shaft

When mounting clutches, pulleys, etc. onto the motor shaft, axial forces must not occur! Therefore, use the internal thread of the shaft end as an assembly aid.

1) medium operating temperature < 90 °C
medium operating speed < 2000 rpm (DA 100-160), medium operating speed < 1500 rpm (DA 180-225)

2.10. Radial force diagrams

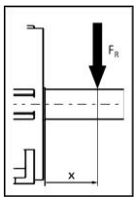

Sample diagrams:

Force application x = 110 mm of the shaft shoulder
Bearing service life 20.000 h, shaft with a feather key groove

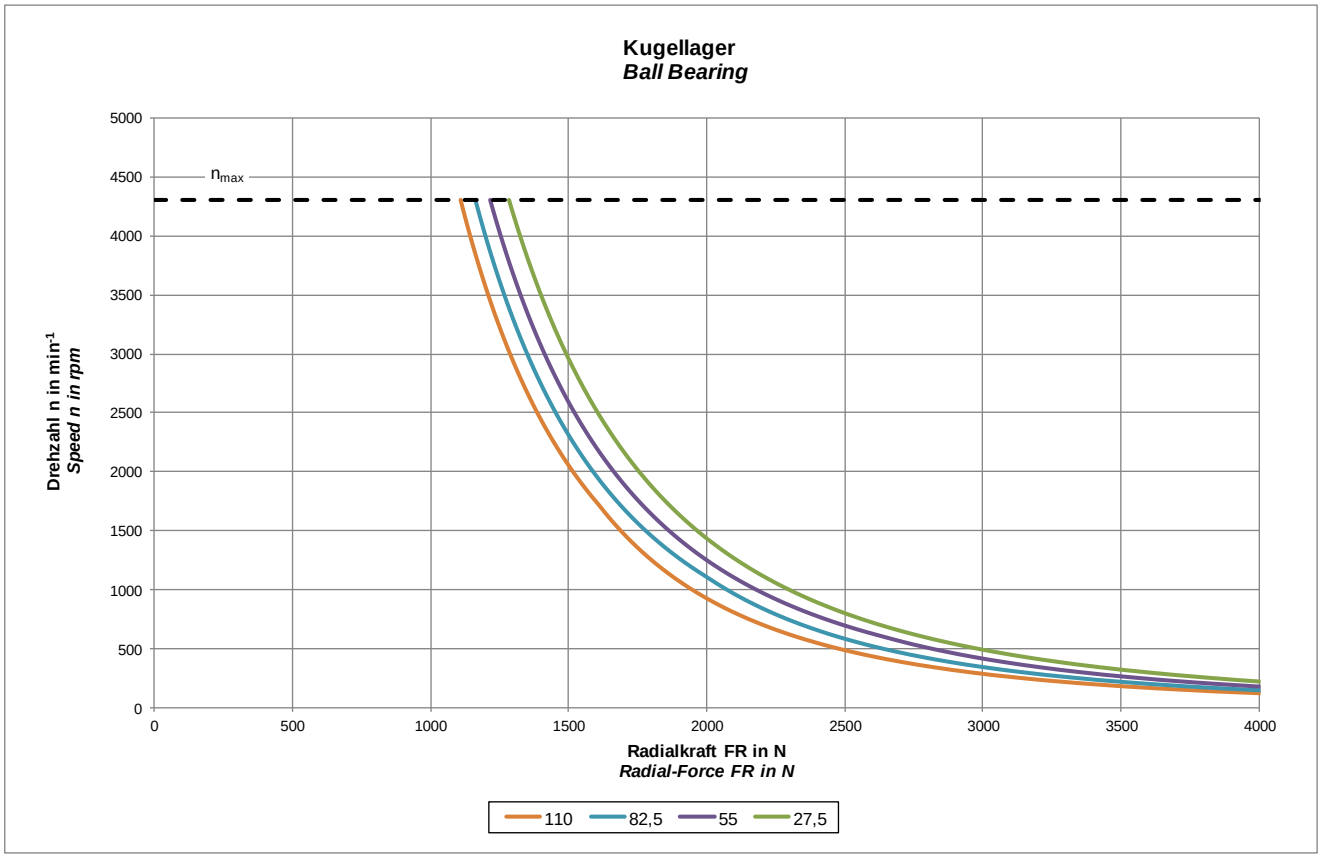

Explanation with regard to the sample diagram:

By the radial force F_R of the application in the characteristic ball bearing“ or “roller bearing” the peak speed of the bearing can be determined.
From a radial force of 1500 N and a force application x = 110 mm of the shaft shoulder a peak speed of 2000 min^{-1} results.

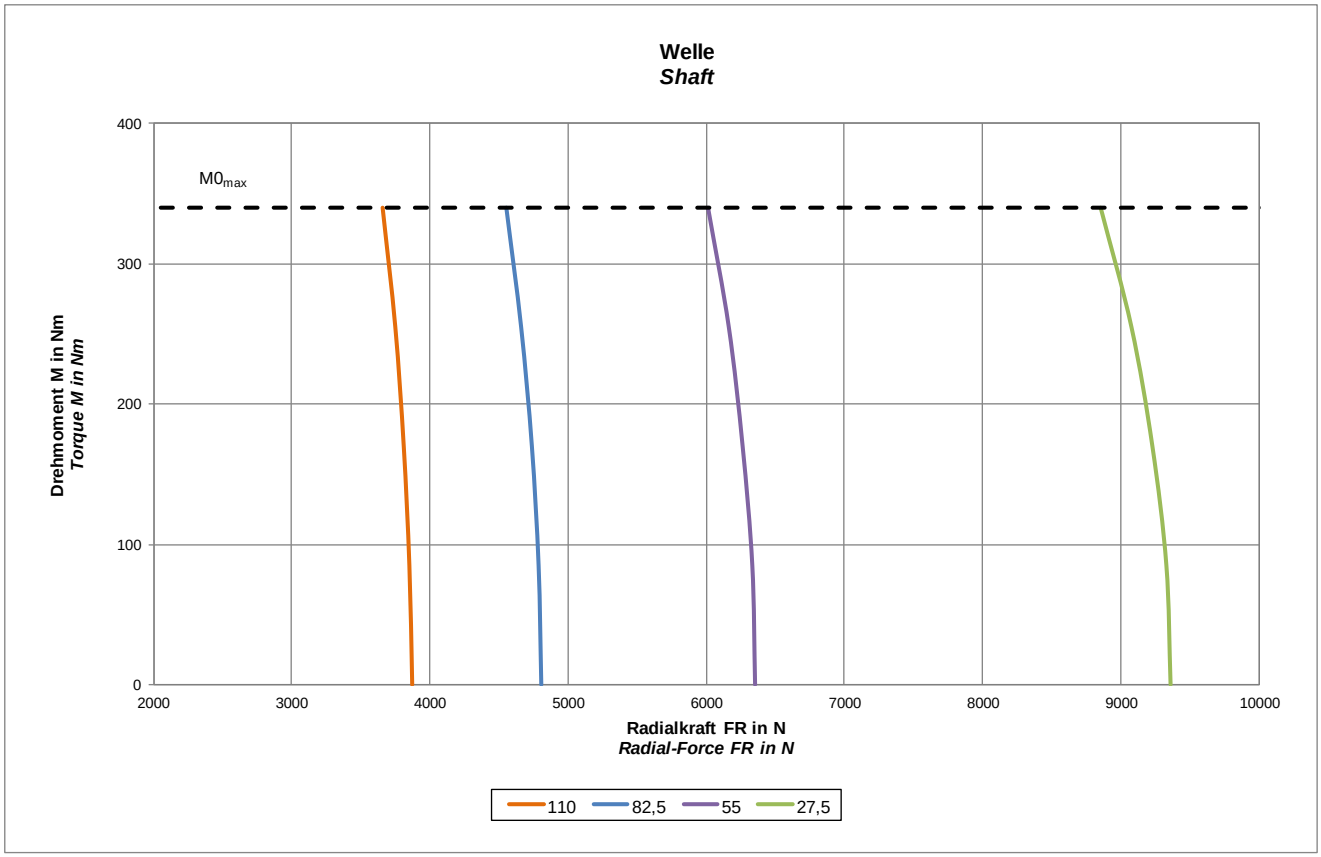

Explanation with regard to the sample diagram:

The maximum torque that can still be transmitted results from the characteristic “shaft”.
From a radial force of 3770 N with a force application of x = 110 mm of the shaft shoulder a transmittable torque of 200 Nm results.

Diagrams DA1-100

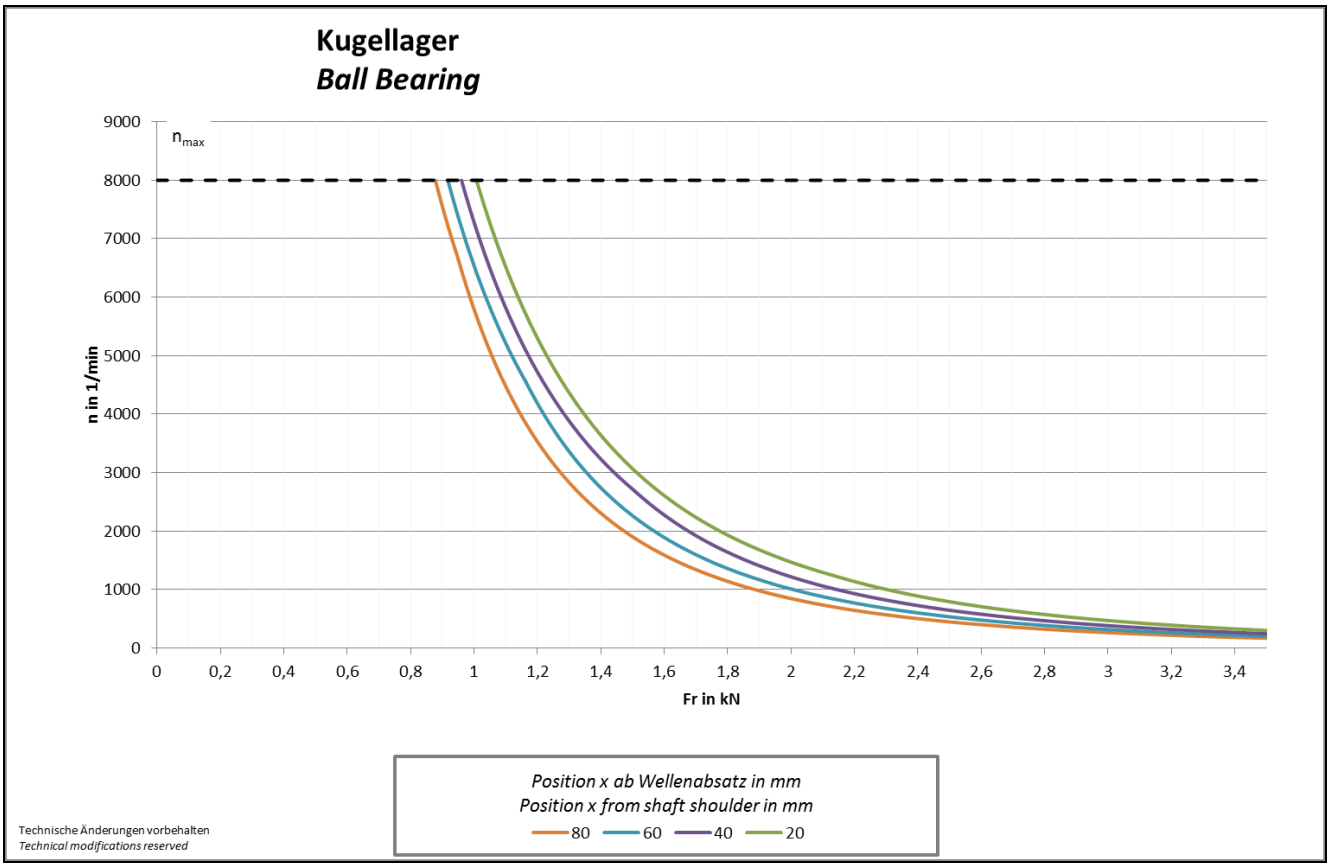

Note: Grease operating life F_{h10} of 20.000 h at $n_{\text{mean value}} \leq 2000\ \text{min}^{-1}$

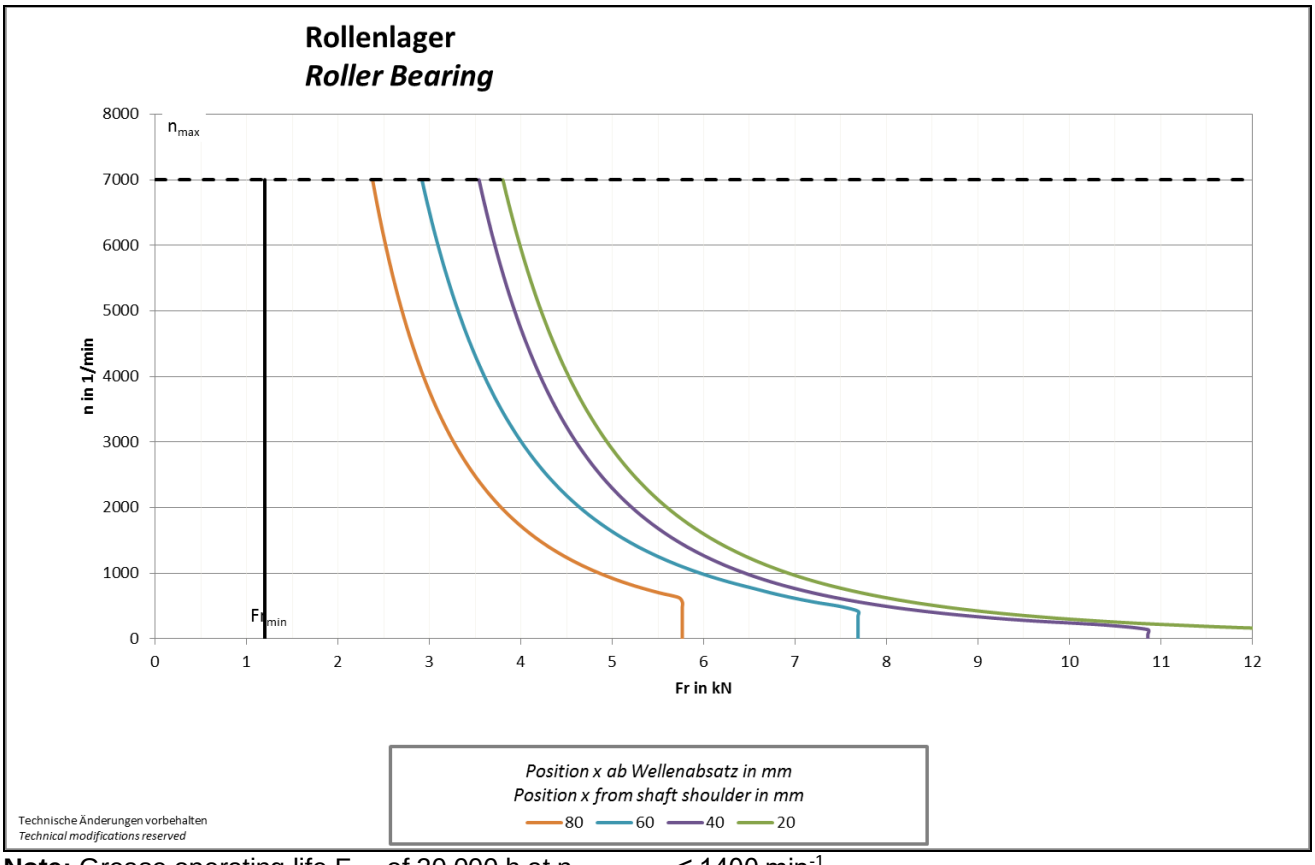

Note: Grease operating life F_{h10} of 20.000 h at $n_{\text{mean value}} \leq 1400\ \text{min}^{-1}$

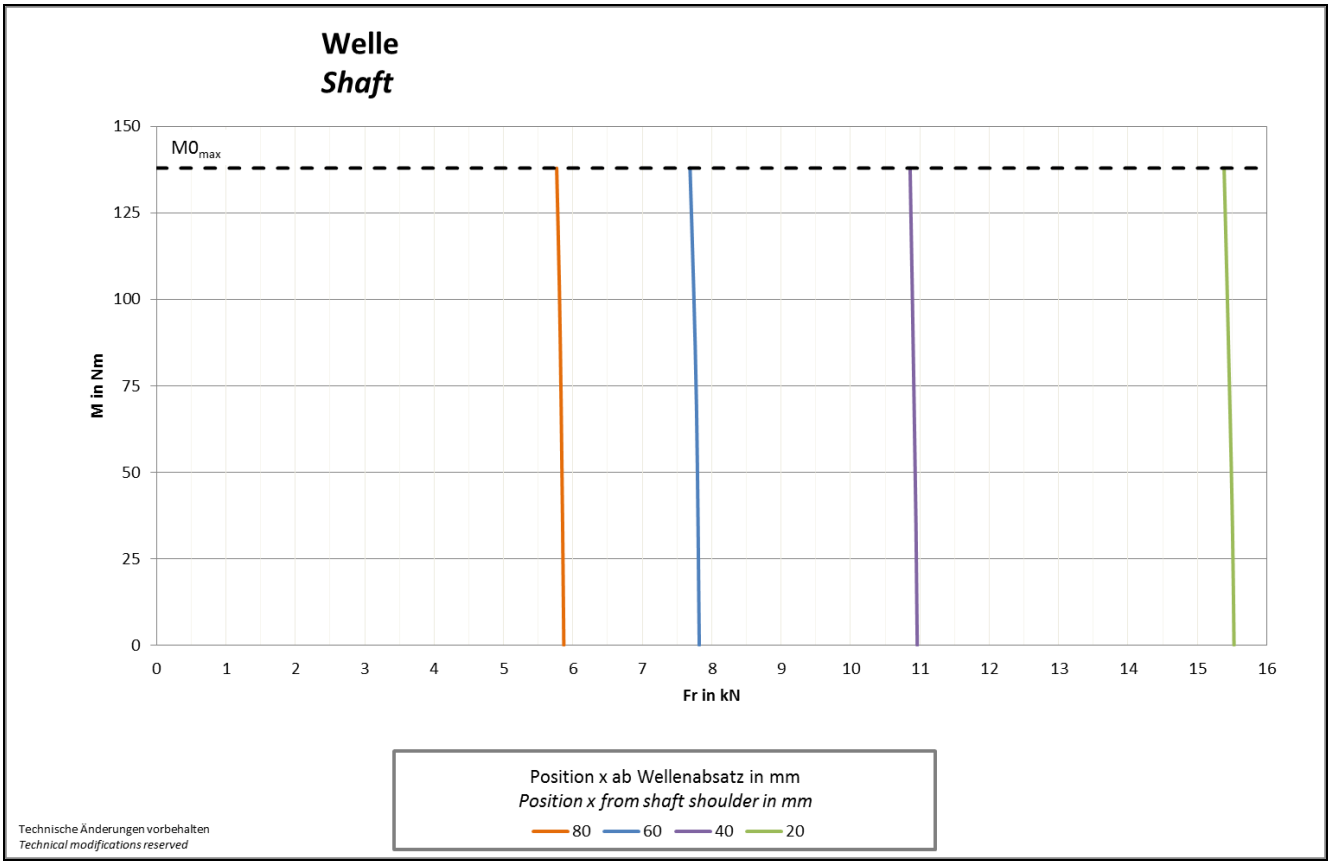

Diagrams DA1-132

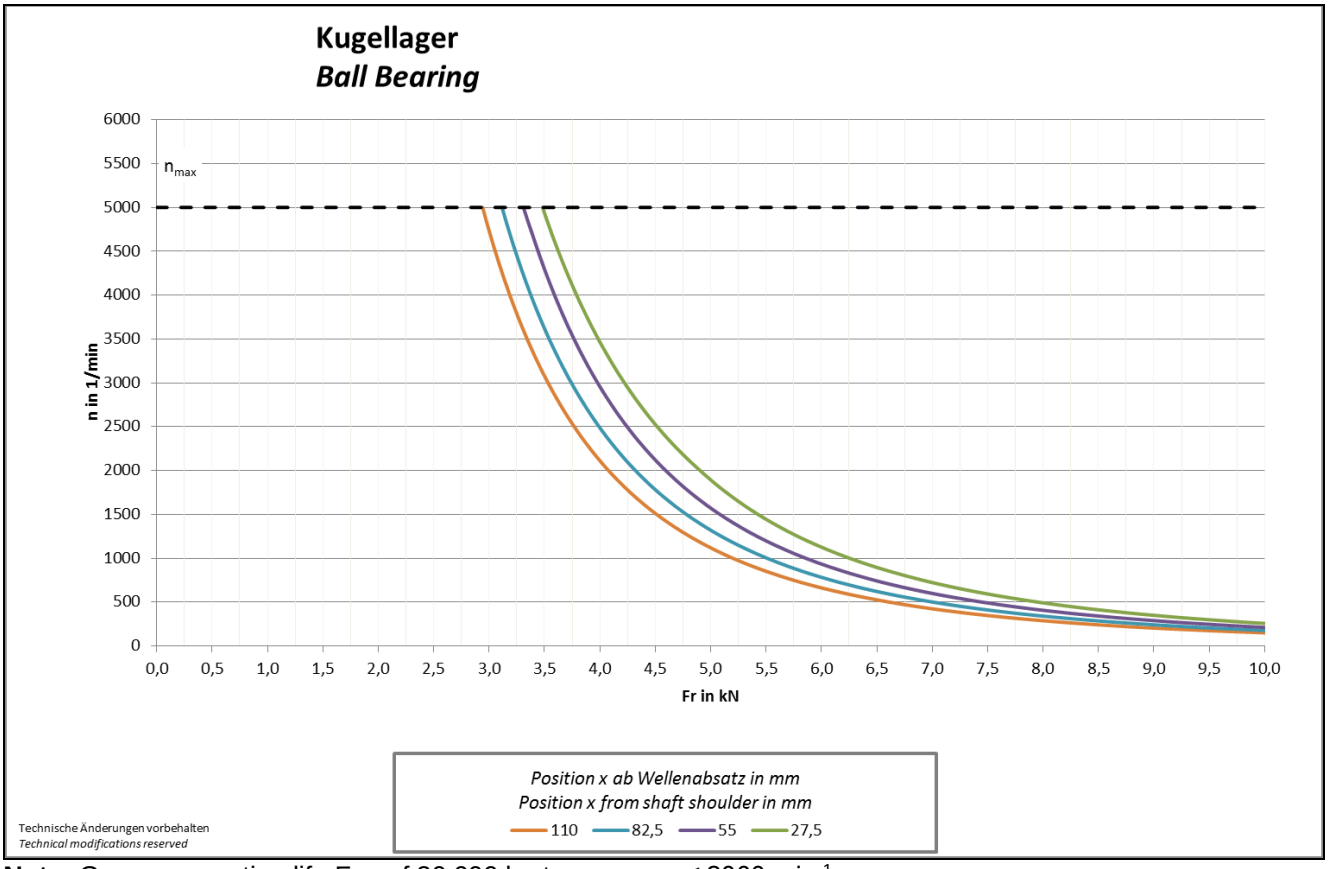

Note: Grease operating life F_{h10} of 20.000 h at n mean value ≤ 2000 min^{-1}

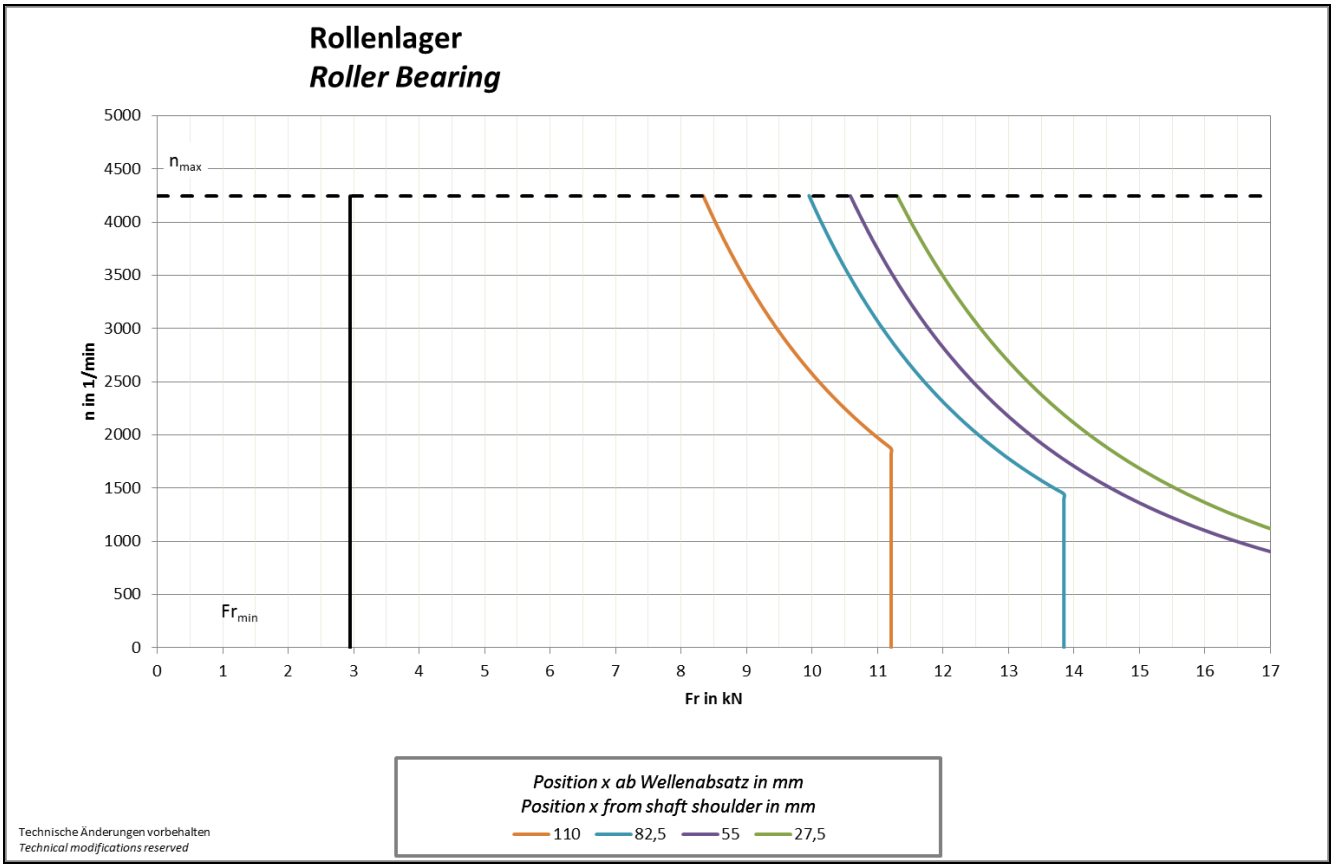

Grease operating life F_{h10} of 20.000 h at $n_{mean\ value}$ ≤ 1000 min^{-1}

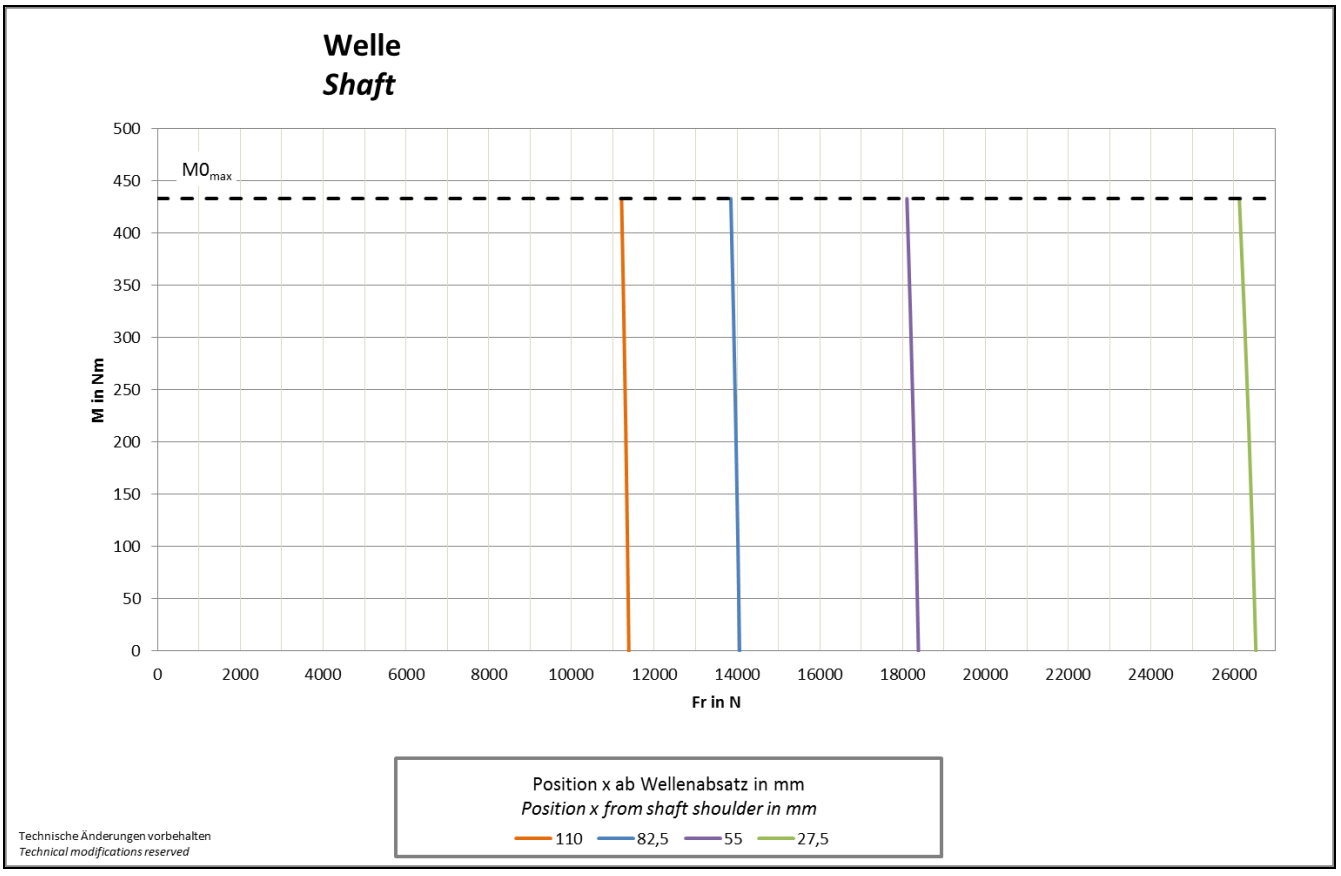

Diagrams DA1-160

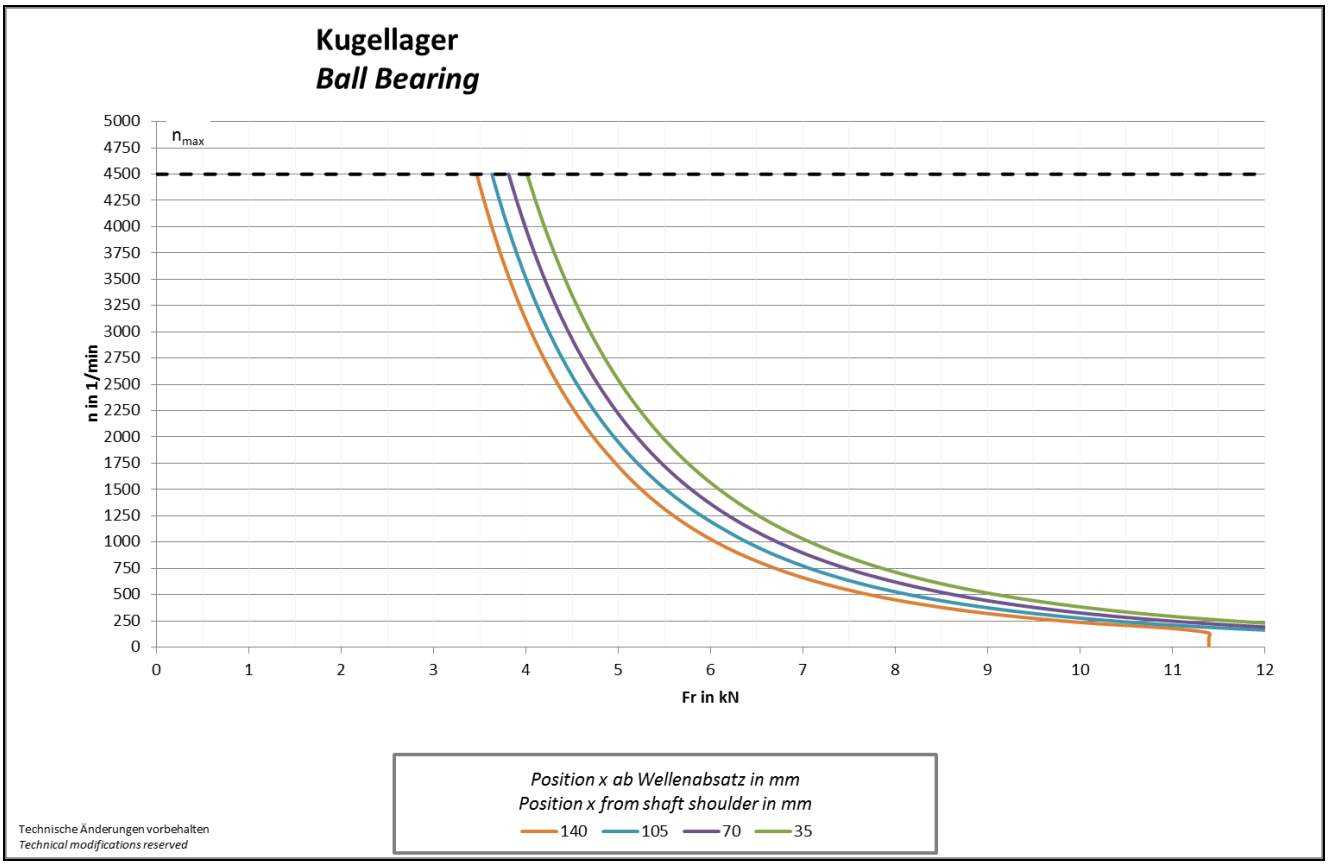

Note: Grease operating life F_{h10} of 20.000 h at $n_{\text{mean value}} \leq 2000\ \text{min}^{-1}$

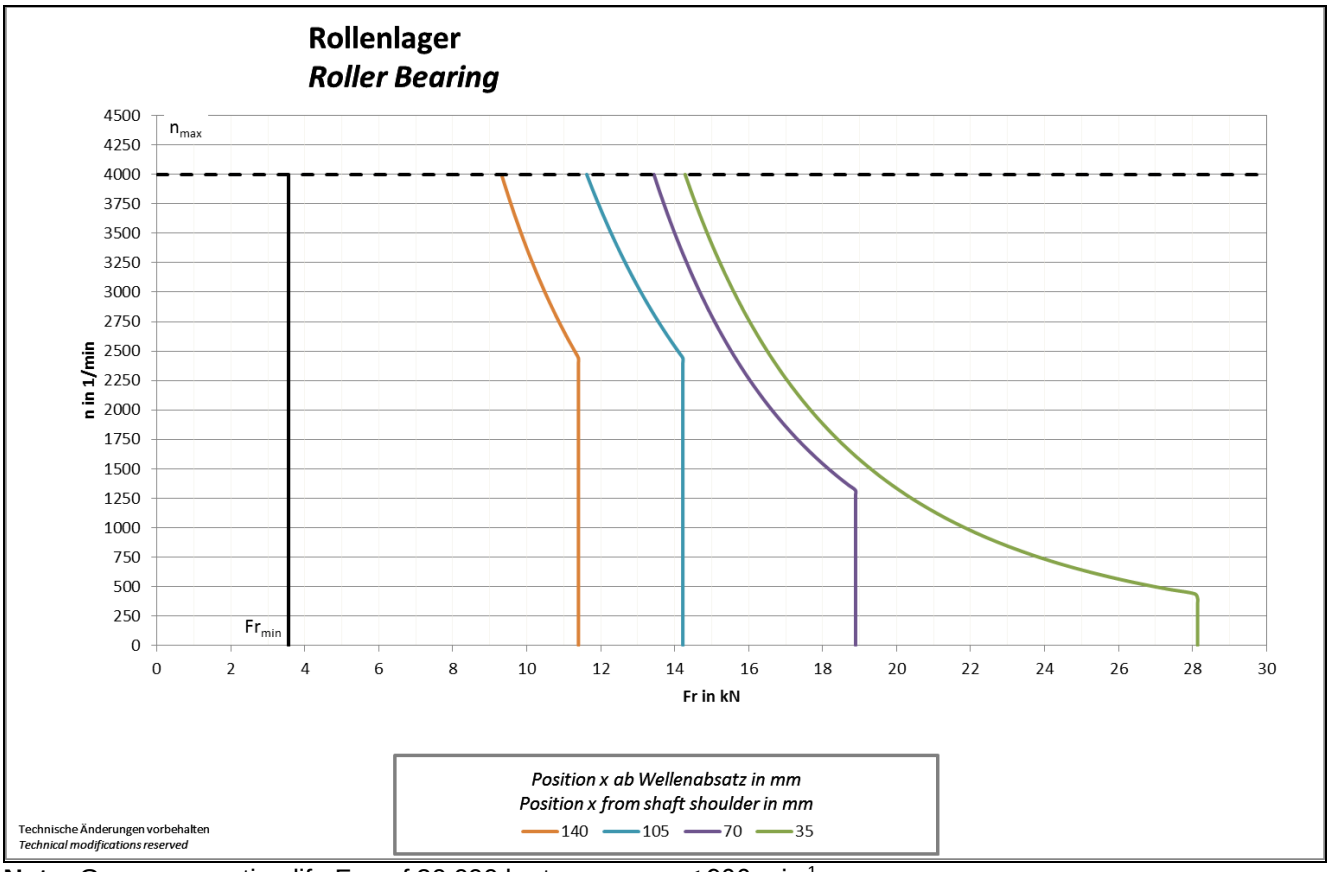

Note: Grease operating life F_{h10} of 20.000 h at $n_{\text{mean value}} \leq 900\ \text{min}^{-1}$

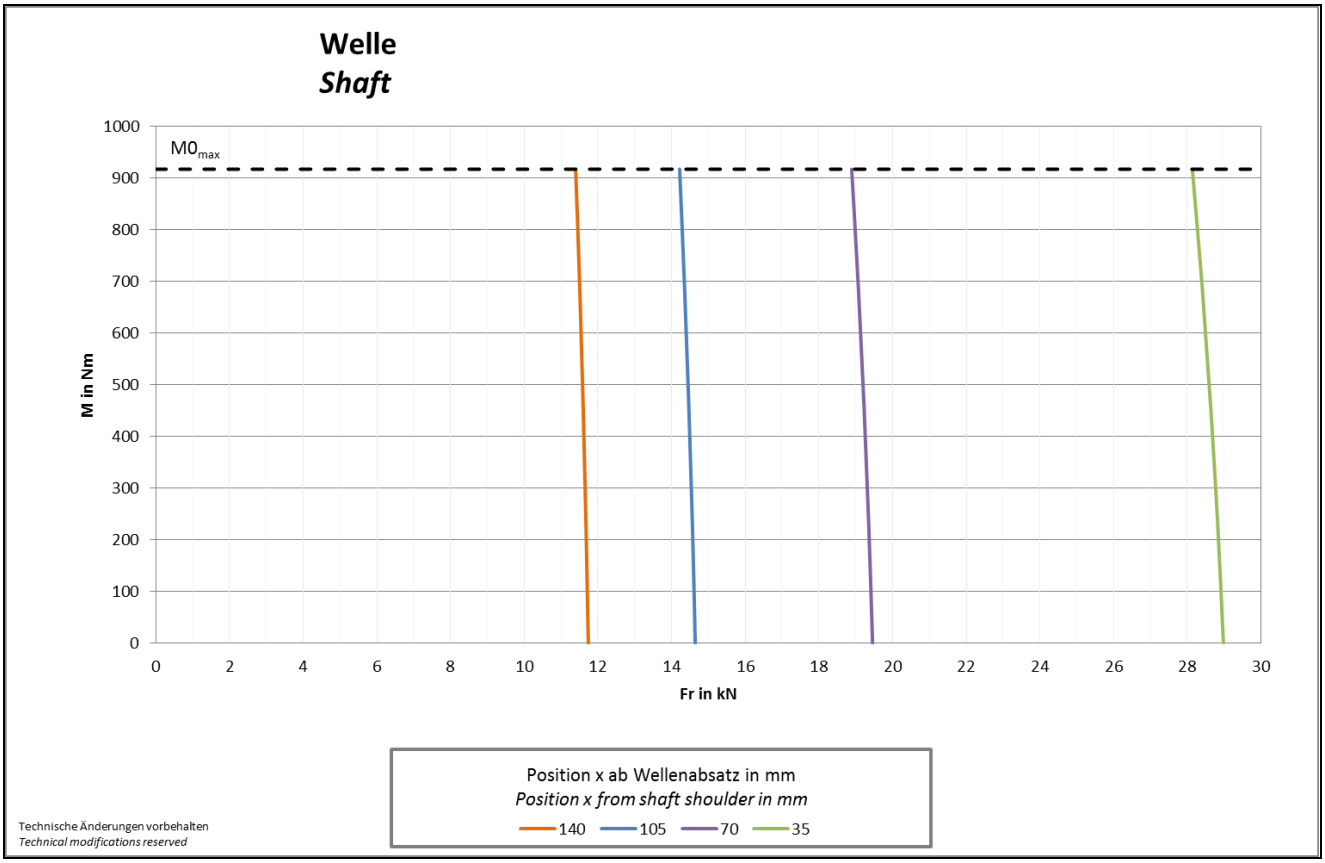

Diagrams DA1-180

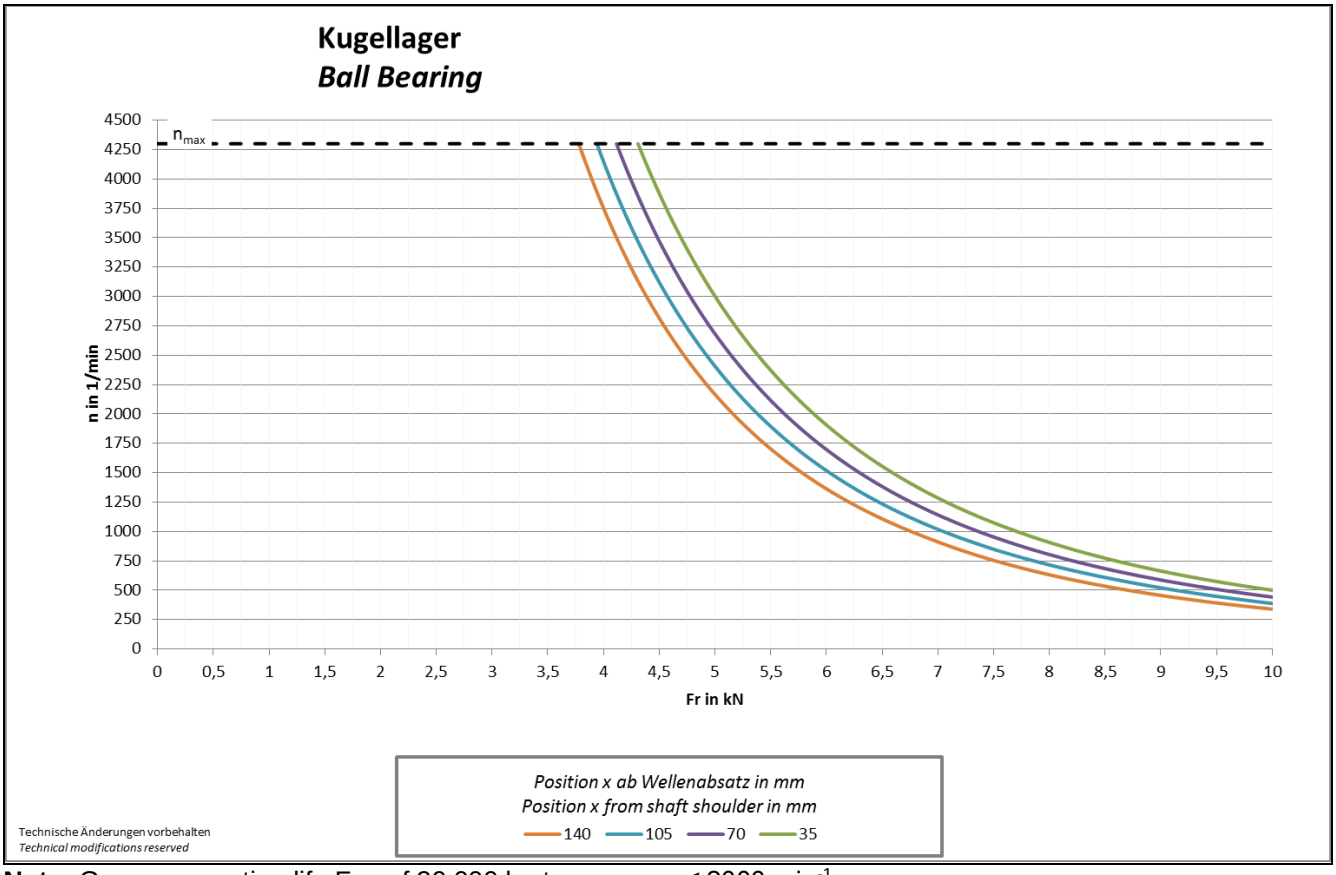

Note: Grease operating life F_{h10} of 20.000 h at $n_{\text{mean value}} \leq 2000\ \text{min}^{-1}$

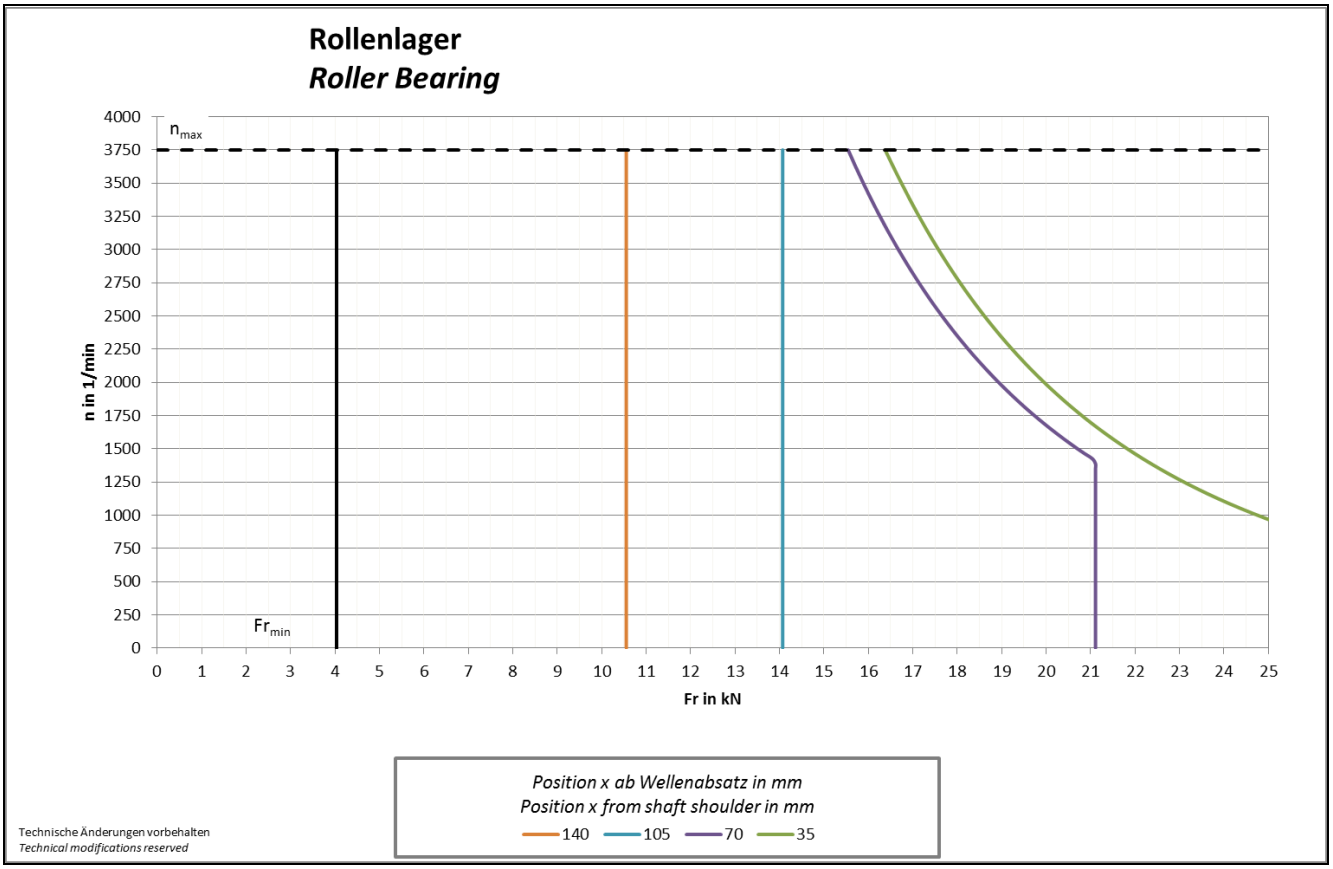

Note: Grease operating life F_{h10} of 20.000 h at $n_{\text{mean value}} \leq 800\ \text{min}^{-1}$

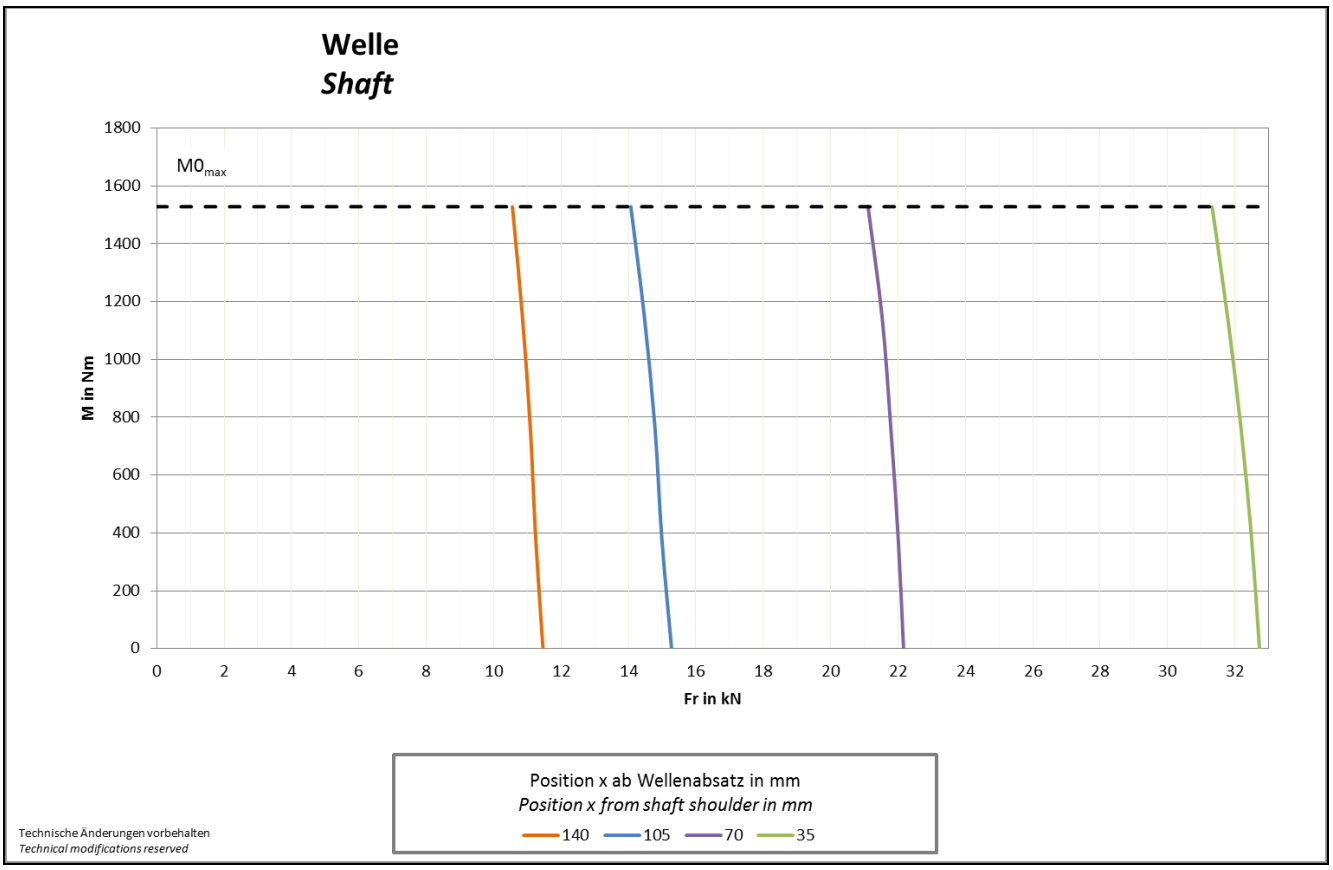

Diagrams DA1-225

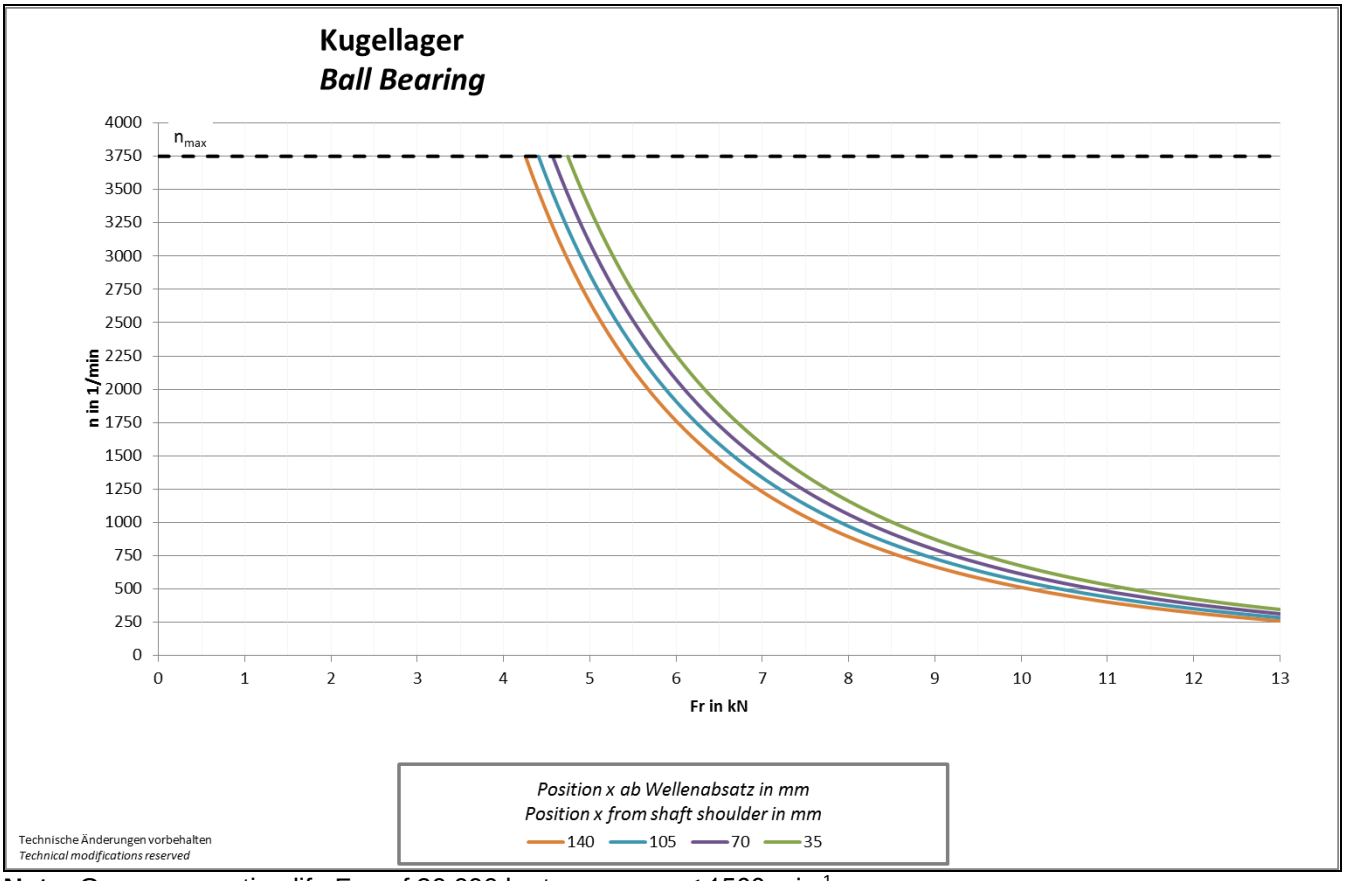

Note: Grease operating life F_{h10} of 20.000 h at n mean value ≤ 1500 min^{-1}

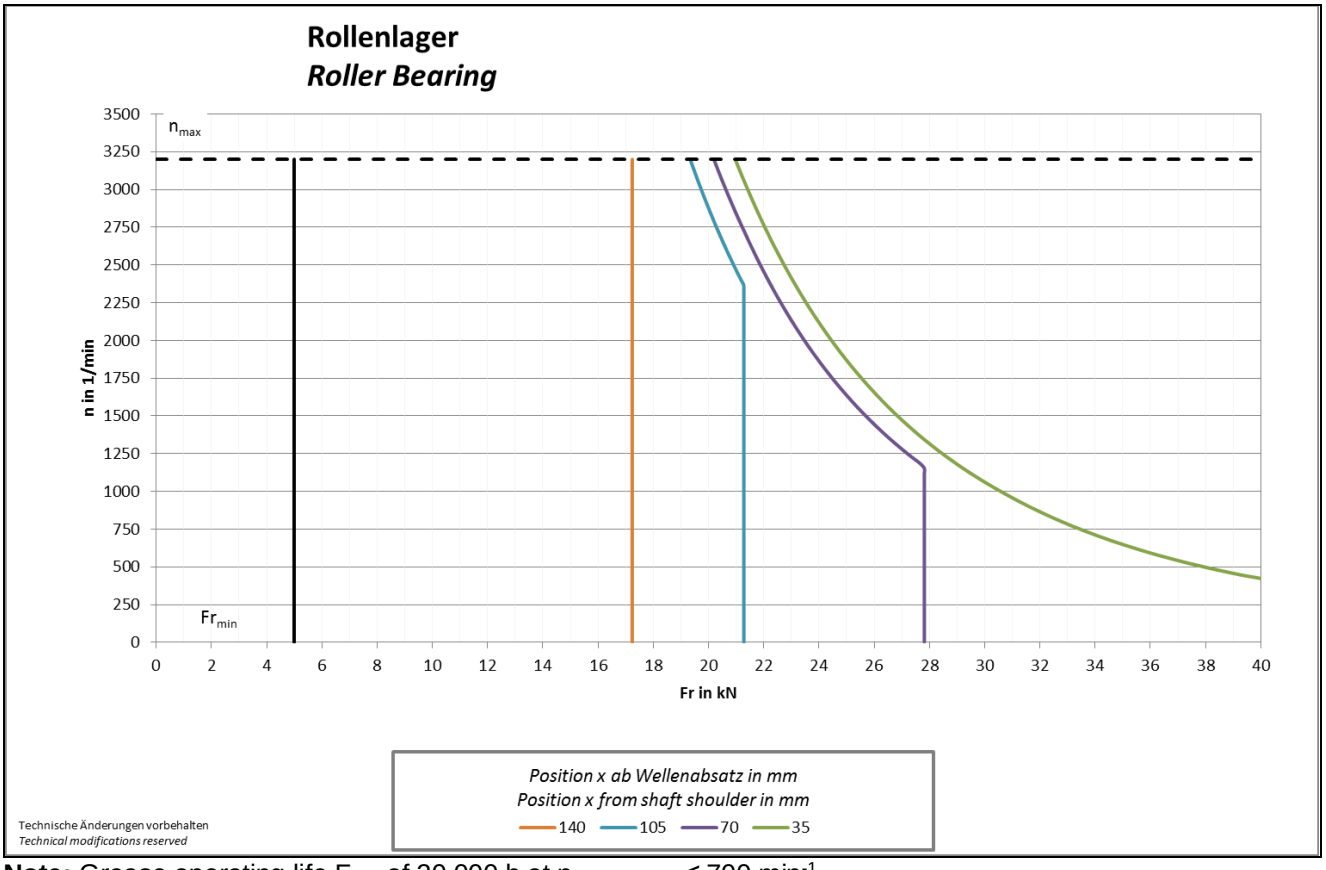

Note: Grease operating life F_{h10} of 20.000 h at n mean value ≤ 700 min^{-1}

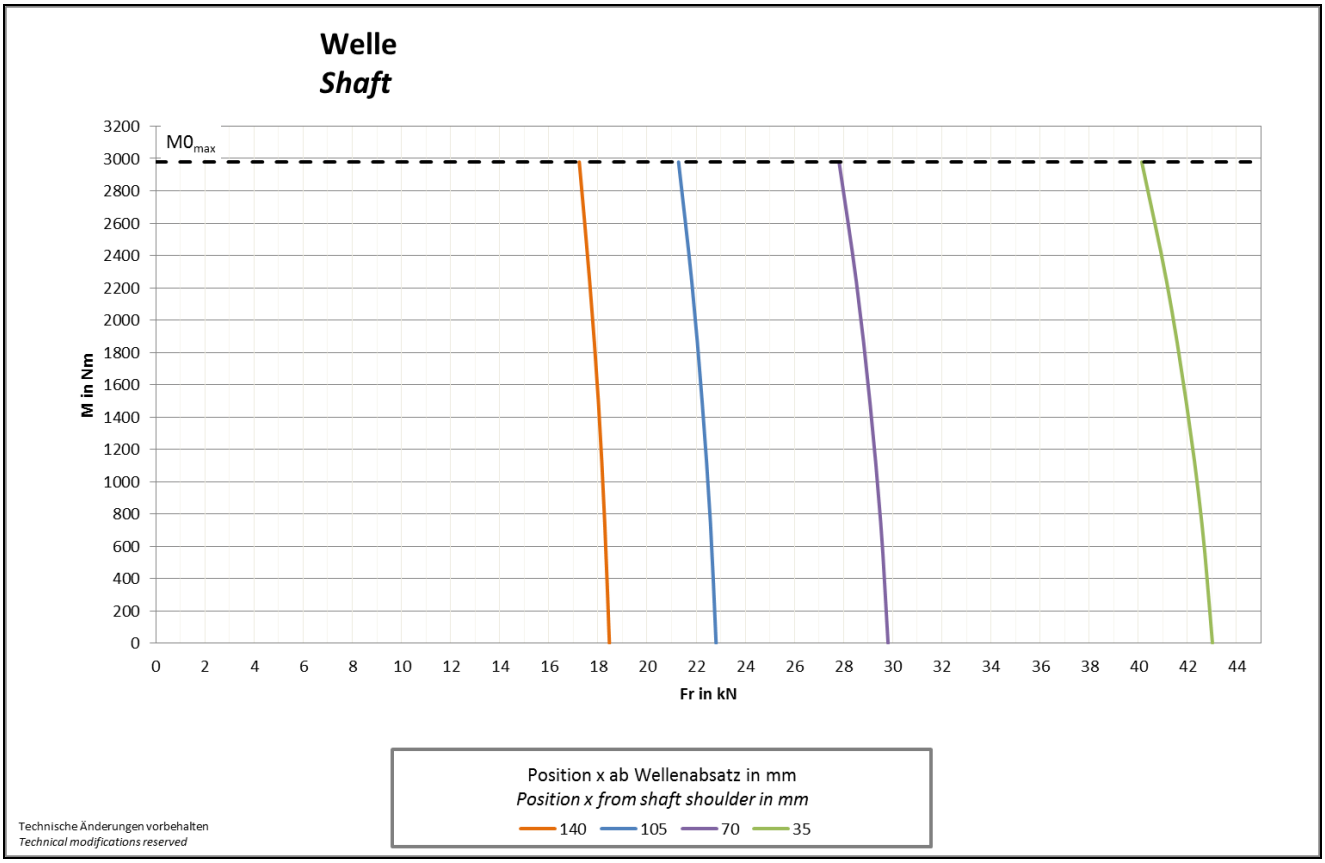

Diagrams DA1-280

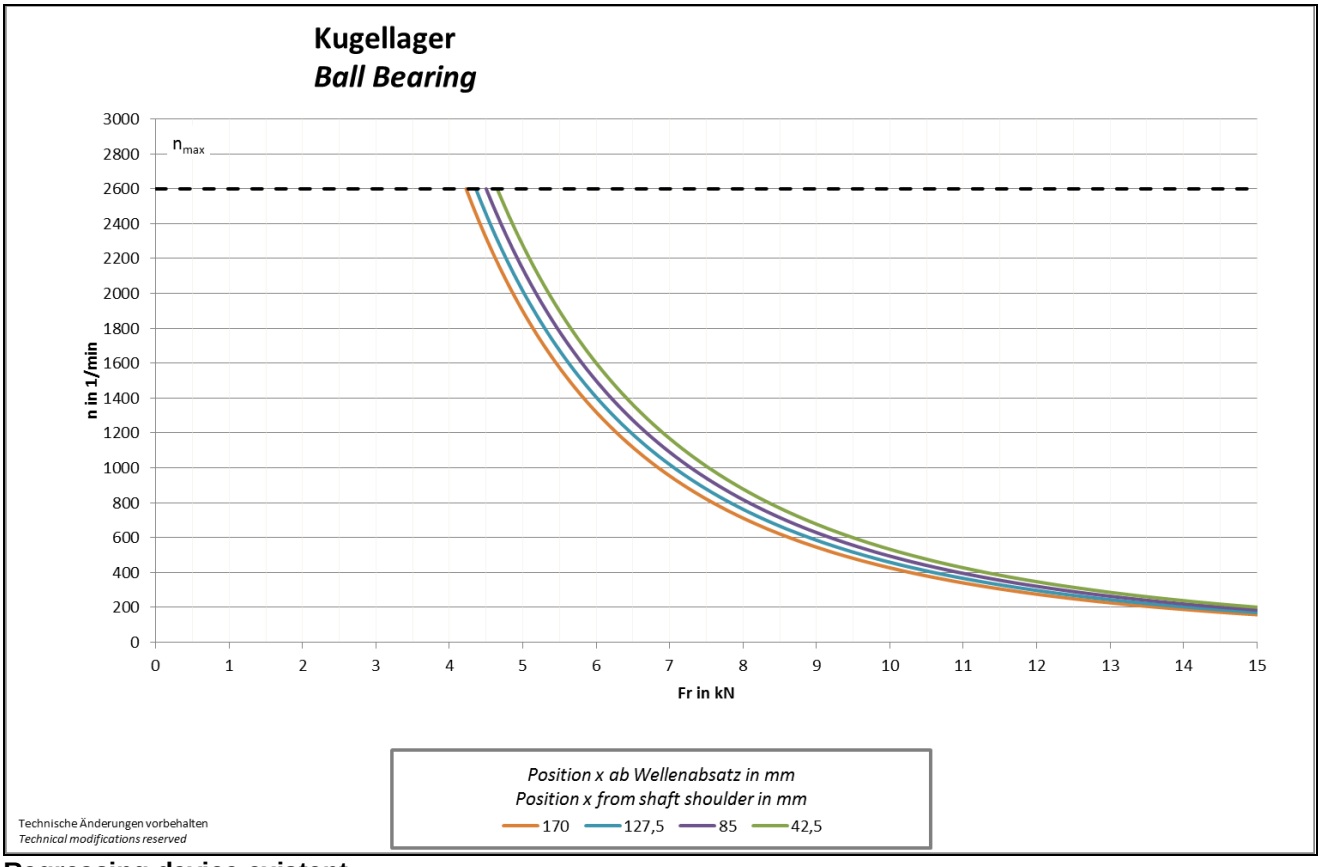

Regreasing device existent

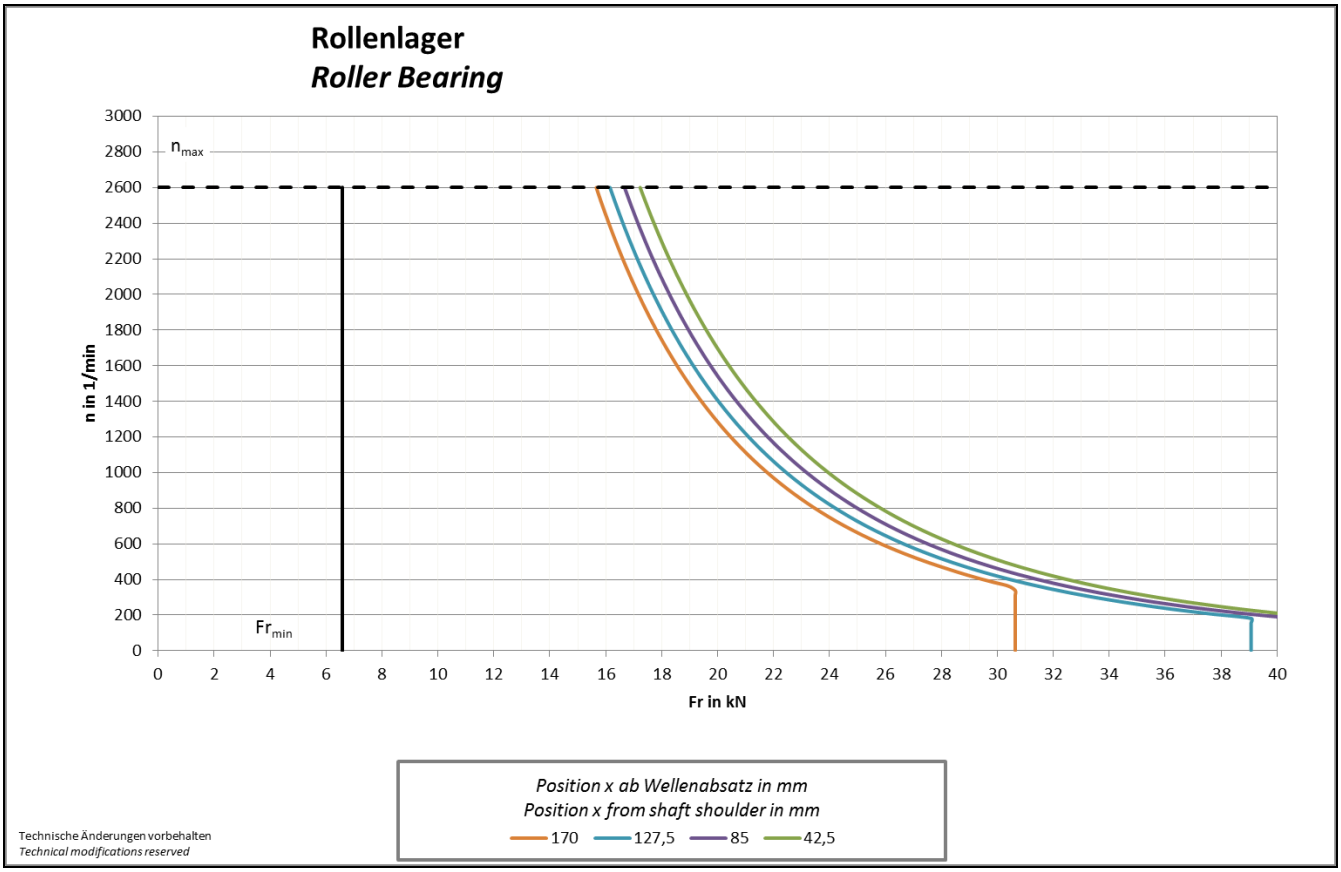

Regreasing device provided

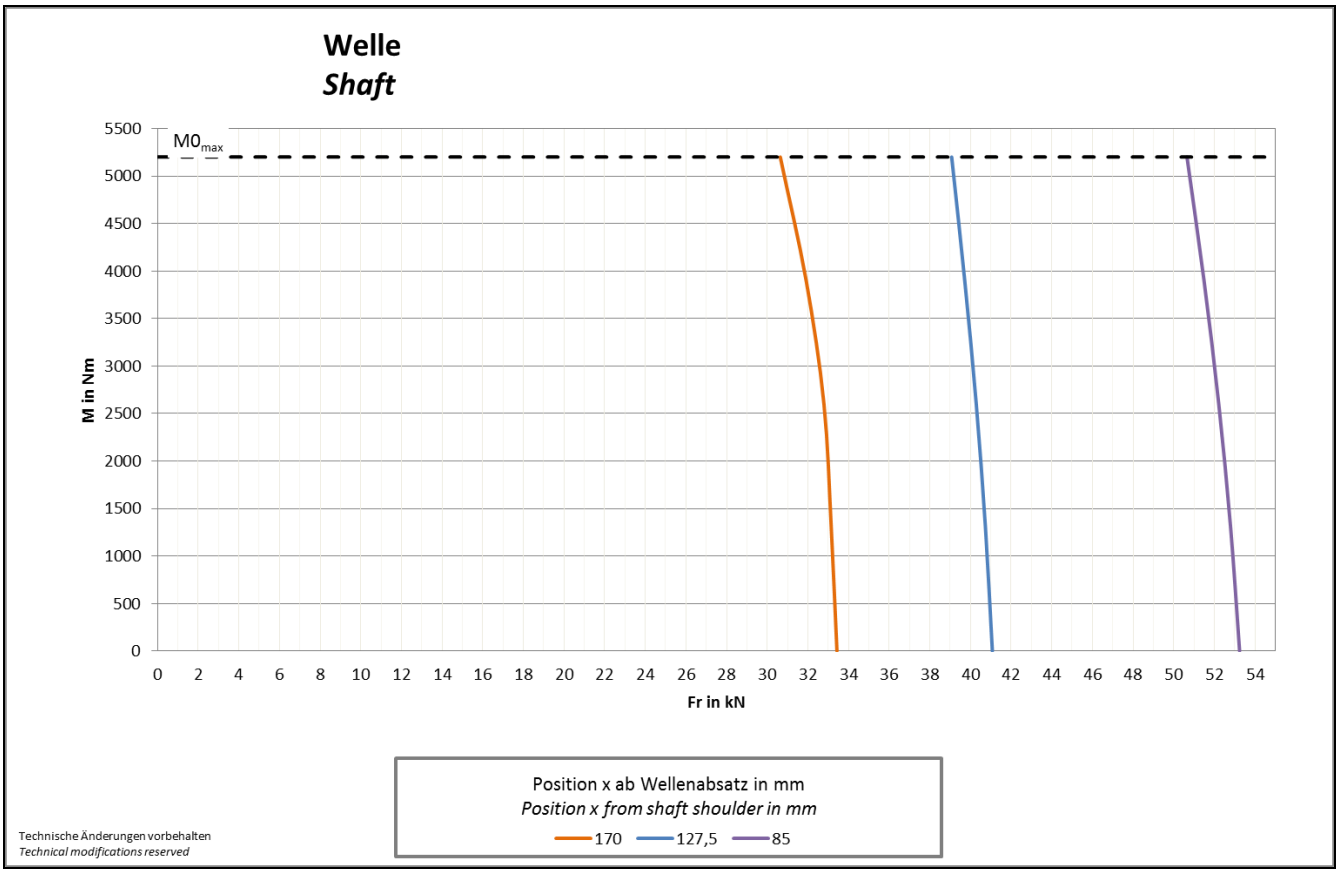

3. Motor components (options)

3.1. Holding brake

For motor type	Brake type	Brake torque M_B for holding brake [Nm)]	Input power [W]	Max. perm. switching energy perm. per switching operation [kJ]	Dis-engaging time [s]	Engaging time [s]	Inertia [kgm²]	Max. perm. speed [rpm]	Weight [kg]
DA1-100…A	SB 50	50	96	10	0.120	0.160	0.0005	4000	5
DA1-100…W	SB100	100	106	15	0.180	0.250	0.0015	3500	9.5
DA1-132	SB 200	200	170	20	0.225	0.300	0.0040	3000	13
DA1-160 1)	SB 360	320	190	30	0.350	0.300	0.0090	3000	29
DA1-180	On request								
DA1-225	On request								
DA1-280	On request								

1)Radial fan on request

For use as a **holding brake** the following must be observed:

- **3 emergency stops** (individual braking operations) per hour are possible if evenly distributed
- Switching times values are valid for switching on the AC side, in a cold state, with basic air gap and holding brake
- Disengaging time – Time until the brake has completely disengaged (brake without torque)
- Engaging time – Time until the brake torque is reached
- All information is valid for installation on a horizontal shaft.
- The supplier must be contacted before vertical installation.
- Requirements other than those indicated can be catered for on request

Brake time / Switching energy
It is necessary to check that the brake is suited for its application. For this, the switching energy must be determined.

Determination of the braking time [t_B]

t_B $t_B = \frac{\sum J * \Delta n}{9{,}55 * (M_B \pm M_L)} + t_0$ in s

$\sum J$ Total moment of inertia in kgm² = J_{mot} + J_{add} (referred to motor shaft)
J_{mot} Motor moment of inertia in kgm²
J_{add} Additional moment of inertia in kgm² (referred to motor shaft)
Δn Motor speed in rpm
M_B Brake torque in Nm
M_L Load torque in Nm (positively calculated if it decelerates, negatively calculated if it accelerates)
t_0 Time in s from the switching instant to the full extent of the braking torque (response time)
I Number of cycles per hour

Determining the switching energy [W_R]

$$W_R = \frac{\sum J \cdot \Delta n^2}{182.4} \cdot \frac{M_B}{(M_B \pm M_L)} \quad \text{in} \quad \frac{\text{joules}}{\text{switching operation}}$$

Determining the switching capacity [P_R]

$$P_R = \frac{W_R \cdot i}{1000} \quad \text{in} \quad \frac{kJ}{h}$$

$W_{Rperm} \leq$ value from table

In most cases, t_0 is negligible. If this is not the case and the time t_0 must be reduced, you can achieve this by interrupting the magnet circuit on the DC side.
However, this measure must be known before dimensioning the brake motor.

3.1.1. Brake supply

Standard: Normal voltage 24 V DC Supply with transformer and rectifier
Option: Normal voltage 104 and 176 V DC Supply using brake supply unit
The brake supply unit must be order separately.
The brakes are designed with micro-switch (normally open contact). The silver contacts are coated with a layer of gold, which enables two applications. By maximum load of the gold layer, the gold layer can be burned irreversible. In this case, the contact material "gold layer" cannot longer be used.

Electrical data of the switches:

Contact material	Min. load	Ideal range of use		Max. load
Gold coat	0 mA; 0 V up to 3 Mio. cycles	0 mA; 0 V up to 3 Mio. cycles	10 mA; 12 V up to 1 Mio. cycles	0,1 A; 12 V up to 100.000 cycles
Argent	10 mA; 12 V up to 3 Mio. cycles	100 mA; 12 V up to 3Mio. cycles	5 A; 30 V up to 50.000 cycles	5 A; 30 V up to 50.000 cycles

The brakes can be executed optional with hand ventilation and lock.

3.1.2. Brake connection

DA1-100 – 225 at axial and radial external cooling

Plug:

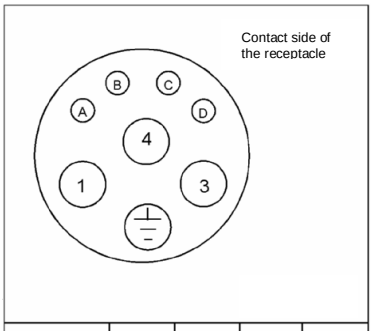

Pin	A	B	C	D
Signal	M	M		
Pin	1	⏚	3	4
Signal	B		B	

Mating plug Speedtec size 1 for currents I_0 to 20A

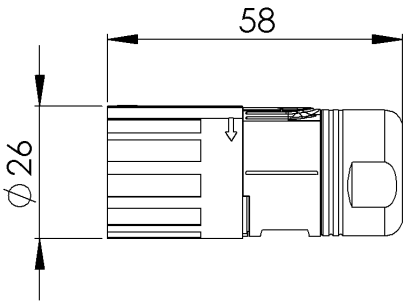

DA1-132 – 280 at water cooling

Terminal:

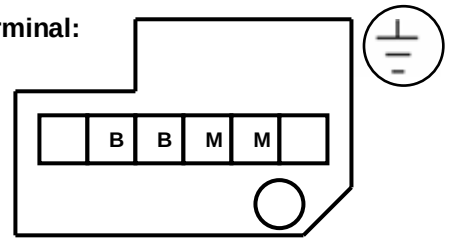

B - Brake
M – Micro-switch

Brake attachment with radial forced ventilation on request.

3.2. Encoder

3.2.1. Resolver

Pole pair number	1
Transmission ratio	0,5 ± 0,05
Frequency	5 kHz
Nominal input voltage	7 V_{rms}
Effective input power at no-load speed	112 mW
Current consumption at no-load speed	70 mA
Max. output voltage at no-load speed	3,5 V ± 10%
Voltage constant	61 mV/°
Rotor resistance	48 Ω ± 10%
Stator resistance	31 Ω ± 15%
Rotor impedance at no-load speed	70 + j 74Ω ± 15%
Rotor impedance with short circuit	62 + j 66Ω ± 15%
Stator impedance at no-load speed with minimum coupling	108 + j 206Ω ± 15%
Stator impedance with short circuit and maximum coupling	97 + j 183Ω ± 15%
Phase shift	8° ± 3°
Zero voltage	30 mV
Angle error in relation to ($\Delta\varphi_{max}+\Delta\varphi_{min}$)/2	± 6’
Shock according to DIN EN 60068-2-27 (11ms)	≤ 102 g
Vibration according to DIN EN 60068-2-6 (55-2000 Hz)	≤ 51 g

Resolver connection

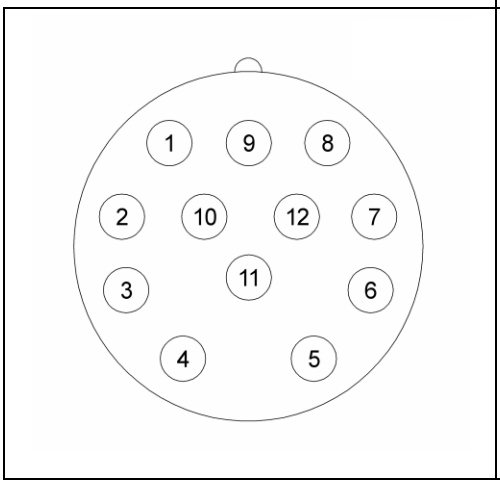

Pin	Signal
1	cos -
2	-
3	-
4	-
5	sin -
6	sin +
7	-
8	cos +
9	-
10	ref +
11	-
12	ref -

View on the contact side of the receptacle

NOTE:
Use only at low demands on the true running characteristics of the motor.
The technical data was specified by the manufacturer and we assume no liability for its correctness.

3.2.2. Resolvers for safety-related applications

Pole pair number	1
Ratio	0,5 ± 0,05
Frequency	5 kHz
Safety integrity level	SIL 3 (IEC 61508) in combination with b maXX 5000
Performance Level	PL e (EN ISO 13849) in combination with b maXX 5000
Maximum angular speed	100.000 rad/s²
Active input power in no-load operation	112 mW
Rated input voltage	7 V_{rms}
Current consumption in no-load	70 mA
max. output voltage in no-load	3,5 V ± 10%
Voltage constant	61 mV/°
Rotor resistance	48 Ω ± 10%
Stator resistance	31 Ω ± 15%
Rotor impedance in no-load	70 + j 74Ω ± 15%
Rotor impedance in case of short circuit	62 + j 66Ω ± 15%
Stator impedance in no-load at a minimum coupling	108 + j 206Ω ± 15%
Stator impedance in case of short circuit and maximum coupling	97 + j 183Ω ± 15%
Phase shift	8° ± 3°
Zero voltage	30 mV
Angular error with regard to $(\Delta\varphi_{max}+\Delta\varphi_{min})/2$	± 6'
Shock in accordance with DIN EN 60068-2-27 (11 ms)	≤ 102 g
Vibration in accordance with DIN EN 60068-2-6	≤ 51 g(55-2000 Hz)

Resolver connection

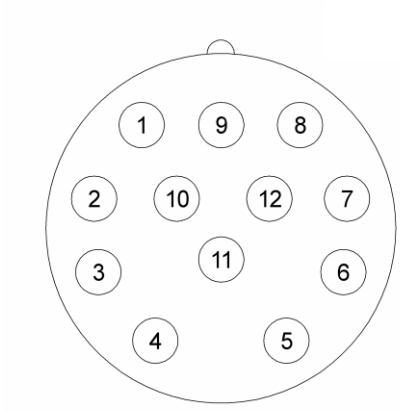

Pin	Signal
1	cos -
2	-
3	-
4	-
5	sin -
6	sin +
7	-
8	cos +
9	-
10	ref +
11	-
12	ref -

View on mating side of connector socket

Note:
Use at low requirements to the concentricity properties of the motor, only.
The technical data was specified by the encoder manufacturer. We assume no liability for the correctness of the data.
The configuration options of the safety encoders with different motor variants are available on request.

3.2.3. SINCOS SRS/SRM 50 (SICK)

	SRS50	SRM50
Number of sine, cosine periods per revolution	1024	
Number of increments per revolution	32768	
Number of absolute resolved revolutions	1	4096
Code type for the absolute value	binär	
Output frequency of the sine and cosine signals	0-200 kHz	
Operation speed according to which the absolute position can be provided	+/- 45”	
Maximum operation speed	+/- 7’’	
Output signals; 2x90° shifted sinusoidal signals	6000 rpm	
Operation speed up according to which the absolute position can be provided	12000 rpm	
Output signals; 2 x 90° offset sinusoidal signals	1 V_{ss}	
Output signal	serial RS 485 asynchronous, half duplex	
Operating voltage range	7-12 V	
Max. no-load operating current	80 mA	
Shock according to DIN EN 60068-2-27 (10 ms)	100 g	
Vibration according to EN 60068-2-6 (10-2000 Hz)	20 g	

SRS/SRM 50 connection

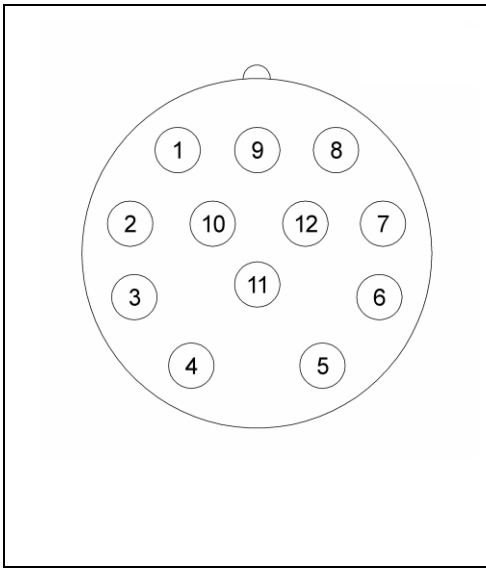

Pin	Signal
1	cos -
2	+ 485
3	-
4	-
5	sin +
6	sin -
7	- 485
8	cos +
9	-
10	GND
11	-
12	+ U

View on the contact side of the receptacle

NOTE:
This encoder is a component susceptible to ESD.
The technical data was specified by the encoder manufacturer and we assume no liability for its correctness.

3.2.4. SINCOS SRS/SRM50-S (SICK)

	SRS50-S	SRM50-S
Safety integrity level	SIL2 (IEC 61508), SILCL2 (IEC 62061)	
Category	3 (EN ISO 13849)	
Performance level	PL d (EN ISO 13849)	
Maximum angular speed	200.000 rad/s^2	
Number of sine, cosine periods per revolution	1.024	
Step number of revolution	32.768	
Number of the absolutely resolved revolutions	1	4.096
Code type for the absolute value	binary	
Output frequency of the sine, cosine signals	0-200 kHz	
Operating speed according to which the absolute position can be generated	6.000 rpm	
Maximum operation speed	12.000 rpm	
Output signals, 2x90° shifted sine-shaped signals	1 V_{ss}	
Output signals	serial RS 485, asynchronous, half-duplex	
Operating voltage range	7-12 V	
Operating current no load	80 mA	
Shock according to DIN EN 60068-2-27	100 g (10 ms)	
Vibration according to DIN EN 60068-2-6 (10-2000 Hz)	20 g	

SRS/SRM50-S connection	Pin	Signal
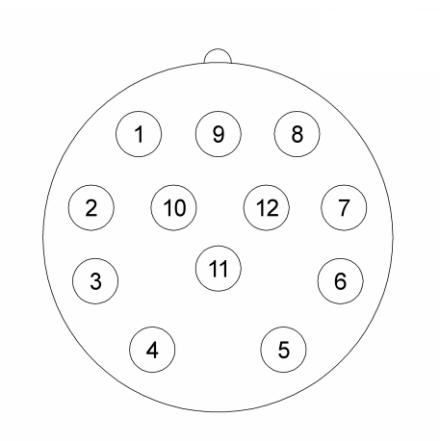	1	cos -
	2	+ 485
	3	-
	4	-
	5	sin +
	6	sin -
	7	- 485
	8	cos +
	9	-
	10	GND
	11	-
	12	+ U

View on the mating side of the connector socket

NOTE:
This encoder is an ESD sensitive component. The technical data was provided by the encoder manufacturer and we assume no liability for the correctness. The configuration option of the safety encoder including different motor versions are provided on request.

3.2.5. ECN1313/EQN1325 (Heidenhain)

	ECN 1313	EQN 1325
Number of sine and cosine periods per revolution	2048	
System accuracy	± 20”	
Number of absolute completed revolutions	1	4096 (12 bit)
Code type for the absolute value	EnDat 2.1	
Sampling limit frequency or limit frequency	0 ... 200 kHz	
Position values/revolution	8192 (13 bit)	
Maximum speed at which the absolute position can be defined	12000 rpm	
Maximum operating speed	12000 rpm	
Power supply	3.6-14 V	
Current consumption without load	≤ 160 mA	≤ 200 mA
Shock 6ms according to DIN EN 60068-2-27 (6ms)	≤ 203 g	
Vibration according to DIN EN 60068-2-6 (55-2000 Hz)	≤ 30 g	

ECN 1313/EQN 1325 connection

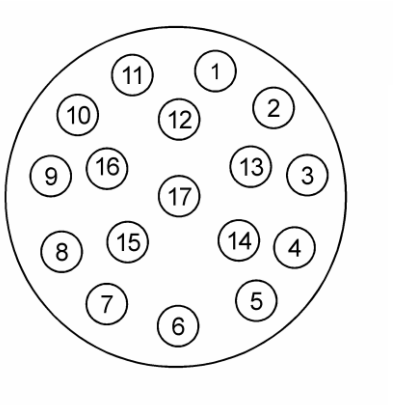

Pin	Signal
1	U_p
2	-
3	-
4	0V
5	-
6	-
7	U_p
8	Clock
9	Clock inv.
10	0V
11	-
12	B +
13	B -
14	Data
15	A +
16	A -
17	Data inv.

View on the contact side of the receptacle

NOTE:
This encoder is a component susceptible to ESD.
The technical data was provided by the encoder manufacturer and we do not assume liability for the correctness.

3.2.6. ECN1325/EQN1337 (Heidenhain)

	ECN 1325	EQN 1337
Number of lines	2048	
System accuracy	± 20”	
Number of absolute completed revolutions	1	4096 (12 bit)
Code type for the absolute value	EnDat 2.2	
Position values/revolution	33554432 (25 bit)	
Maximum speed at which the absolute position can be defined	12000 rpm	
Maximum operating speed	12000 rpm	
Power supply	3.6-14	
Current consumption without load	≤ 160 mA	≤ 200 mA
Shock 6ms according to DIN EN 60068-2-27 (6ms)	≤ 203 g	
Vibration according to DIN EN 60068-2-6 (55-2000 Hz)	≤ 30 g	

ECN1325/EQN1337 connection

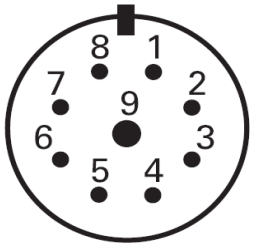

Pin	Signal
1	Clock
2	Clock inv.
3	U_p
4	0V
5	Data
6	Data inv.
7	Sensor U_p
8	Sensor 0V
9	-

View on the contact side of the receptacle

NOTE:
This encoder is an ESD sensitive component.
The technical data was provided by the encoder manufacturer and we do not assume liability for the correctness.

3.2.7. ECN1325/EQN1337-S (Heidenhain)

	ECN 1325-S	EQN 1337-S
Safety integrity level	SIL 2 acc. to EN 61508	
Category	3 (EN ISO 13849)	
Performance level	PL d (EN ISO 13849)	
Maximum angular speed	50.000 rad/s^2	
System accuracy	± 20“	
Number of the absolutely resolved revolutions	1	4.096 (12bit)
Code type for the absolute value	EnDat 2.2	
Positioning values/revolution	33.554.432 (25 bit)	
Operating speed according to which the absolute position can be generated	12.000 1/min	
Maximum operating speed	12.000 1/min	
Voltage supply	3,6…14 V	
Current consumption without load	≤ 160mA	≤ 200mA
Shock according to DIN EN 60068-2-27 (6 ms)	≤ 203 g	
Vibration according to DIN EN 60068-2-6 (55-2000 Hz)	≤ 30 g	

ECN1325/EQN1337-S connection

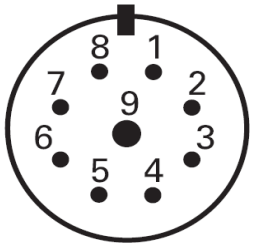

Pin	Signal
1	Clock
2	Clock inv.
3	U_p
4	0V
5	Data
6	Data inv.
7	Sensor U_p
8	Sensor 0V
9	-

View to the contact side of the receptacle

NOTE:
This encoder is an ESD sensitive component.
The technical data was provided by the encoder manufacturer, and we do not assume liability for the correctness.
The configuration options of the safety encoder including different motor versions are provided on request.

3.2.8. ERN1320 (Heidenhain)

	ERN 1320
Incremental signals	TTL
Line numbers/Precision	1024/ ± 64'' 2048/ ± 32'' 4096/ ± 16''
Sample frequency	≥ 300 kHz
Maximum operational speed	15000 rpm
Supply voltage	5 V ± 10 %
Power consumption without load	≤ 120 mA
Shock according to DIN EN 60068-2-27 (6 ms)	≤ 102 g
Vibration according to DIN EN 60068-2-6 (55-2000 Hz)	≤ 30 g

ERN 1320 connection

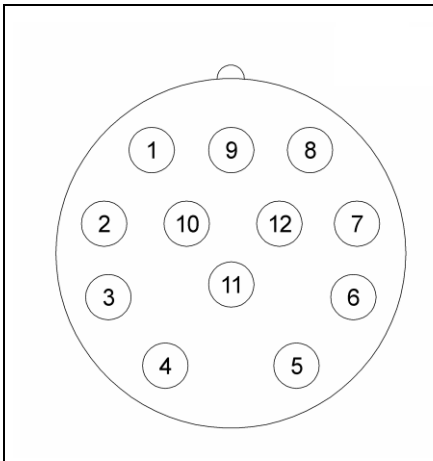

Pin	Signal
1	U2 -
2	U_p sense
3	U0 +
4	U0 -
5	U1 +
6	U1 -
7	-
8	U2 +
9	-
10	0V
11	0V sense
12	U_p

View on the contact side of the receptacle

NOTE:
This encoder is an ESD sensitive component.
The technical data is specification from the encoder manufacturer and we do not assume liability for its correctness.

3.2.9. ERN1380 (Heidenhain)

	ERN 1380
Incremental signals	1 V_{SS}
Line numbers/Precision	1024/ ± 40''
Cut-off frequency -3 dB	≥ 210 kHz
Maximum operational speed	15000 rpm
Supply voltage	5 V ± 10 %
Power consumption without load	≤ 120 mA
Shock according to DIN EN 60068-2-27 (6 ms)	≤ 203 g
Incremental signals	≤ 30 g

ERN 1380 connection

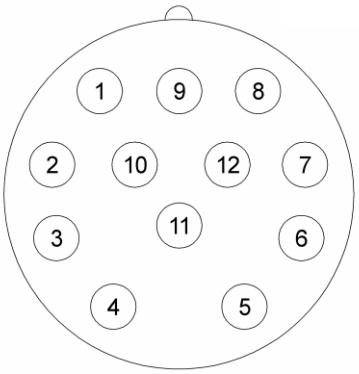

Pin	Signal
1	U2 -
2	+ 5V sense
3	U0 +
4	U0 -
5	U1 +
6	U1 -
7	-
8	U2 +
9	-
10	0V
11	0V sense
12	UG

View on the contact side of the receptacle

NOTE:
This encoder is an ESD sensitive component.
The technical data is specification from the encoder manufacturer and we do not assume liability for its correctness.

3.2.10. ERN1385 (Heidenhain)

	ERN 1385
Incremental signals	1 V_{SS}
Line numbers/Precision	2048/ ± 20''
Sample frequency	≤ 300 kHz
Maximum operational speed	15000 rpm
Supply voltage	5 V ± 5 %
Power consumption without load	≤ 130 mA
Shock according to DIN EN 60068-2-27 (6 ms)	≤ 102 g
Vibration according to DIN EN 60068-2-6 (55-2000 Hz)	≤ 30 g

ERN 1385 connection

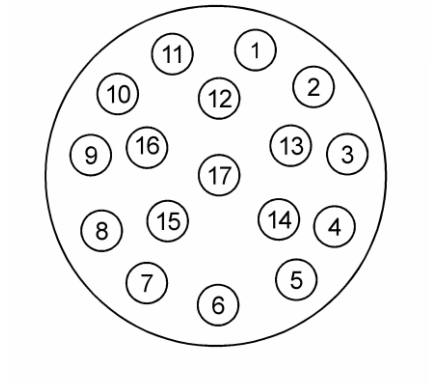

Pin	Signal
1	A +
2	A -
3	R +
4	D -
5	C +
6	C -
7	M-Encoder
8	TM +
9	TM -
10	P-Encoder
11	B +
12	B -
13	R -
14	D +
15	0V sense
16	5V sense
17	-

View on the contact side of the receptacle

NOTE:
This encoder is an ESD sensitive component.
The technical data is specification from the encoder manufacturer and we do not assume liability for its correctness.

3.2.11. DFS60 (SICK)

	DFS60
Incremental signals	TTL HTL
Line numbers	1024 1-65536 (on request)
Maximum output frequency	820 kHz
Maximum operational speed	10000 1/min
Operating voltage range	4,5-5,5 V, TTL 10-32 V, TTL 10-32 V, HTL
Operational current without load	40 mA
Shock according to DIN EN 60068-2-27 (6 ms)	50 g
Vibration according to DIN EN 60068-2-6 (10-2000 Hz)	20 g

DFS60 connection

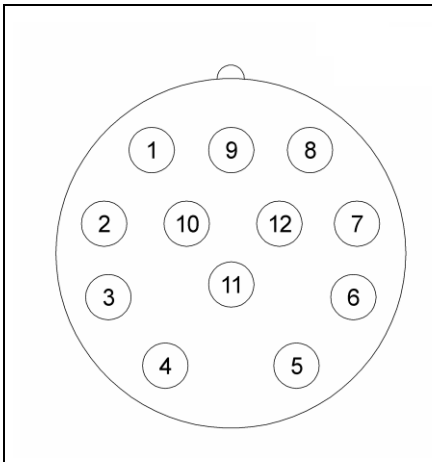

Pin	Signal
1	U2 -
2	U_p sense
3	U0 +
4	U0 -
5	U1 +
6	U1 -
7	-
8	U2 +
9	Shielding
10	0V
11	0V sense
12	U_p

View on the contact side of the receptacle

NOTE:
This encoder is an ESD sensitive component.
The technical data is specification from the encoder manufacturer and we do not assume liability for its correctness.

3.2.12. Dimensional drawing - socket for encoder and –plug

Speedtec angle built-in socket is turnable

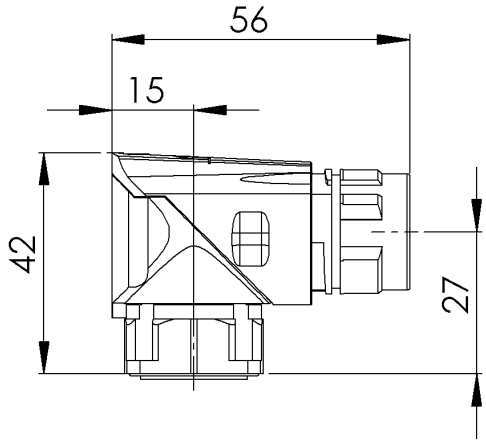

Speedtec mating connector

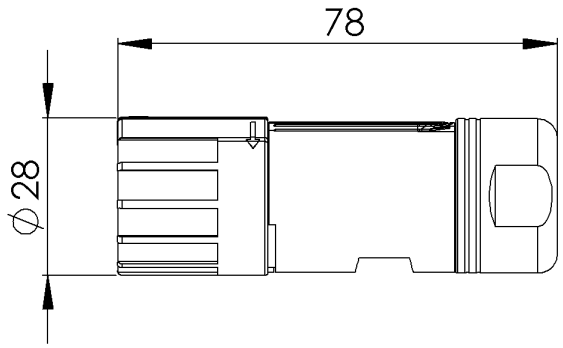

3.3. Encoder cables for b maXX 4000

General Information
A prefabricated encoder cable is used for all encoder systems. The connection at the motor end consists of a 12-pole circular signal connector on resolvers and Hyperface®-encoders, a 17-pole circular signal connector on ECN1313/EQN1325 and a 9-pole circular signal connector on ECN1325/EQN1337. The connection at the controller side consists of a 15-pole Sub-D connector. Optionally, the motor-sided signal circular connector for trailing-type cables is available in the Speedtec version.

The trailing-type cable is suitable for mobile applications such as drag chains, for example. Unlike non-trailing cables made from PVC, the cable sheath is made from durable PU (suitable for environments where acids and bases are present).

3.3.1. Technical data

Technical description - non-trailing type cable for resolver/ SinCos Hiperface®-interface / SinCos - and TTL - incremental encoder

- LiYCY, 5x (2x0.14mm²) + 2 x 0.5mm² copper strand, twisted pairs
- PVC sheath, grey; inscription with Baumüller logo, black
- 1st side: 12-pole circular signal plug connector with 12 socket contacts
- 2nd side: 15-pole Sub-D plug connector with pin contacts and locking screws 4-40UNC
- Outer diameter 9.0 mm (+/- 0.3mm)
- Bending radius: $r \geq 60$ mm (fixed routing), $r \geq 135$ mm (flexible use)
- Nominal voltage: $250V_{AC}$

Technical description – non-trailing type cable for resolver/ SinCos Hiperface®-interface / SinCos - and TTL - incremental encoder

- Li12YC11Y, 5x (2x0.14mm²) + 2 x 0.5mm² copper strand, twisted pairs
- PU sheath, black; inscription with Baumüller logo, white
- 1st side: 12-pole circular signal plug connector with 12 socket contacts
- 2nd side: 15-pole Sub-D plug connector with pin contacts and locking screws 4-40UNC
- Outer diameter 9.0 mm (+/- 0.3mm)
- Bending radius: $r \geq 70$ mm (fixed routing), $r \geq 100$ mm (flexible use)
- Nominal voltage: $300V_{AC}$

Technical description - non-trailing type cable for EnDat® 2.1-interface

- LiYCY, 5x (2x0.14mm²) + 2 x 0.5mm² copper strand, twisted pairs
- PVC sheath, grey; inscription with Baumüller logo, black
- 1st side: 17-pole circular signal plug connector with 17 socket contacts
- 2nd side: 15-pole Sub-D plug connector with pin contacts and locking screws 4-40UNC
- Outer diameter 9.0 mm (+/- 0.3mm)
- Bending radius: $r \geq 60$ mm (fixed routing), $r \geq 135$ mm (flexible use)
- Nominal voltage: $250V_{AC}$

Technical description – Trailing- type cable for EnDat® 2.1-interface

- Li12YC11Y, 5x (2x0.14mm²) + 2 x 0.5mm² copper strand, twisted pairs
- PU sheath, black; inscription with Baumüller logo, white
- 1st side: 17-pole circular signal plug connector with 17 socket contacts
- 2nd side: 15-pole Sub-D plug connector with pin contacts and locking screws 4-40UNC
- Outer diameter 9.0 mm (+/- 0.3mm)
- Bending radius: r ≥ 70 mm (fixed routing), r ≥ 100 mm (flexible use)
- Nominal voltage: $300V_{AC}$

Technical description – trailing-type cable for EnDat® 2.2-interface

- PUR sheath, 1x(4x0.14mm²) + (4x0.34mm²)
- 1 twisted foursome 0.14mm², 4 wires 0.34mm², copper, tin-plated
- Total shield CuSn, inscription Heidenhain
- 1st side: 9-pole circular signal plug connector with 8 socket contacts
- 2nd side: 15-pole Sub-D plug connector with pin contacts and locking screws 4-40UNC
- Outer diameter 6.0 mm
- Bending radius: r ≥ 20 mm (fixed routing), r ≥ 75 mm (flexible use)
- Dielectric strength wire/wire and wire/shield: 0.5kV at 50Hz, 1 minute

3.3.2. Application references

- **Operating temperature of encoder cable resolver/ SinCos Hiperface®-interface / SinCos - and TTL - incremental encoder / EnDat® 2.1**

	Trailing-type	Non-trailing type
Limit temperature	on the surface	on the surface
Static use/minimal movement	- 40 °C to + 80 °C	- 30 °C to + 80 °C
Permanent movement	- 30 °C to + 80 °C	- 5 °C to + 70 °C

- **Operating temperature of encoder cable EnDat® 2.2**

	Trailing-type
Limit temperature	on the surface
Static use/minimal movement	- 40 °C to + 80 °C
Permanent movement	- 10 °C to + 80 °C

- **Routing of cable on motor**

The cables must not touch the surface of the motor.

3.3.3. Order information for encoder cables

Encoder cables for resolver/ SinCos Hiperface®-interface / SinCos - and TTL - incremental encoder - prefabricated cables with connector

Non-trailing type, prefabricated
Cable 5 x (2x0.14mm²) + 2 x 0.5 mm² with plug connector

Length in m	Item Number
1	243601
2	211338
3	219333
4	231166
5	209879
6	220197
7	216455
8	220429
10	210052
15	215716
20	218568
25	218569
30	217094
35	216444
40	217095
45	217567
50	217568
55	217569
60	217570
70	232088

Trailing-type, prefabricated
Cable 5 x (2x0.14mm²) + 2 x 0.5 mm² with plug connector

Length in m	Item Number	Part No. (Speedtec)
3	246658	448944
4	243379	448945
5	239540	448948
6	242954	448946
8	239541	448949
10	239542	448956
15	239543	448962
20	239544	448967
25	239545	448970
30	239546	448971
35	239547	448973
40	240520	448976
45	240521	448978
50	240522	448980
55	244033	448981
60	245484	448982

Encoder cables for EnDat® 2.1- prefabricated cables with plug connector

Non-trailing type, prefabricated
Cable 5 x (2x0.14mm2) + 2 x 0.5 mm2 with plug connector

Length in m	Item Number
2	383152
3	383923
5	393885
7	389445
8	380138
9	389446
10	393886
15	388505
20	388418
25	393887
30	393888
35	387958
40	382006
50	388419
70	384473
90	387391

Trailing-type, prefabricated
Cable 5 x (2x0.14mm2) + 2 x 0.5 mm2 with plug connector

Length in m	Item Number	Part No. (Speedtec)
2	393889	448816
3	369864	448817
5	394014	448818
7	389807	448819
8	393890	448820
9	389808	448821
10	393891	448822
15	393892	448823
17	371494	448824
20	393893	448825
25	393894	448826
30	380358	448827
35	391216	448828
40	382005	448830
50	378022	448832

Encoder cables for EnDat® 2.2 - prefabricated cables with plug connector

Trailing-type, prefabricated cable 1x4x0.14 + 4x0.34 PUR Ø 6mm with plug connector

Length in m	Item Number	Part No. (Speedtec)
2	434056	459031
3	434057	459032
5	434058	459033
10	434059	459035
15	434060	459036
20	434061	459037
25	434062	459038
50	434063	459042

3.4. Encoder cables for b maXX 5000

A prefabricated encoder cable is used for all encoder systems. The connection at the motor end consists of a 12-pole circular signal connector on resolvers and Hyperface® encoder, a 17-pole circular signal connector on ECN1313/EQN1325. The connection at the controller side consists of a 26-pole Sub-D connector. Optionally, the motor-sided signal circular connector for trailing-type cables is available in the Speedtec version.

3.4.1. Technical data

Technical description – trailing-type cable for resolver

- Li9YC, 1 x (2 x 0,25) + Li9Y, 2 x (2x0,25) + Li9YC11Y, 1 x (2 x 0,34), copper strand, twisted pairs
- PUR sheath, green; inscription with Baumüller Nuremberg and encoder cable Resolver
- 1st side: 12-pole circular signal plug connector with 12 socket contacts
- 2nd side: 26-pole Sub-D plug connector with pin contacts and locking screws 4-40UNC
- Outer diameter 7.3 mm (+/- 0.3mm)
- Bending radius: $r \geq 4 \times D$ (fixed routing), $r \geq 10 \times D$ (flexible use)

Technical description - – trailing-type cable for SinCos Hiperface®-interface und SinCos - and TTL - incremental encoder

- Li9YC, 3 x (2 x 0,25) , + Li9Y, 3 x (2 x 0,25) + Li9YC11Y, 1 x (2x0,34), copper strand, twisted pairs
- PUR sheath, green; inscription with Baumüller Nuremberg and encoder cable Hyperface or Incremental
- 1st side: 12-pole circular signal plug connector with 12 socket contacts
- 2nd side: 26-pole Sub-D plug connector with pin contacts and locking screws 4-40UNC
- Outer diameter 9.6 mm (+/- 0.3mm)
- Bending radius: $r \geq 4 \times D$ (fixed routing), $r \geq 10 \times D$ (flexible use)

Technical description – – trailing-type cable for EnDat® 2.1-interface

- Li9YC, 3 x (2 x 0,25) , + Li9Y, 3 x (2 x 0,25) + Li9YC11Y, 1 x (2x0,34), copper strand, twisted pairs
- PUR sheath, green; inscription with Baumüller Nuremberg and encoder cable Endat 2.1
- 1st side: 17-pole circular signal plug connector with 17 socket contacts
- 2nd side: 26-pole Sub-D plug connector with pin contacts and locking screws 4-40UNC
- Outer diameter 9.6 mm (+/- 0.3mm)
- Bending radius: $r \geq 4 \times D$ (fixed routing), $r \geq 10 \times D$ (flexible use)

3.4.2. Application references

- **Operating temperature of encoder cable resolver/ SinCos Hiperface®-interface / SinCos - and TTL - incremental encoder / EnDat® 2.1**

Limit temperature	on the surface
Static use/minimal movement	- 40 °C to + 80 °C
Permanent movement	- 20 °C to + 60 °C

- **Routing of cable on motor**

The cables must not touch the surface of the motor.

3.4.3. Order information for encoder cables

Encoder cable - prefabricated with plug

For resolver

Length in m	Item Number	Art. Nr. (Speedtec)
1	429914	448746
2	429915	448747
3	429916	448748
5	429917	448749
7	429918	448750
10	429919	448751
15	429920	448752
20	429921	448753
25	429922	448754
30	429923	448755
35	429924	448756
40	429925	448757
50	429926	448758
75	429927	448759

For SinCos Hiperface® - interface

Length in m	Item Number	Part No. (Speedtec)
1	429958	448761
2	429959	448762
3	429960	448763
5	429961	448764
7	429962	448765
10	429963	448766
15	429964	448767
20	429965	448768
25	429966	448769
30	429967	448770
35	429968	448772
40	429969	448773
50	429970	448774
75	429971	448775

For SinCos - and TTL - incremental encoder

Length in m	Item Number	Art. Nr. (Speedtec)
1	430015	448777
2	430016	448778
3	430017	448779
5	430018	448780
7	430019	448781
10	430020	448782
15	430021	448783
20	430022	448784
25	430023	448785
30	430024	448786
35	430025	448787
40	430026	448788
50	430027	448789
75	430028	448790

For SinCos EnDat® 2.1 - interface

Length in m	Item Number	Part No. (Speedtec)
1	429986	448796
2	429987	448797
3	429988	448798
5	429989	448799
7	429990	448800
10	429991	448801
15	429992	448802
20	429993	448803
25	429994	448804
30	429995	448805
35	429996	448806
40	429997	448807
50	429998	448808
75	429999	448809

3.5. Temperature sensor

In general the motors are provided by a temperature sensor in the stator winding for evaluation in the motor controller. On request, we can built-in additional PTCs or temperature detectors. The connection is made by the terminal box.

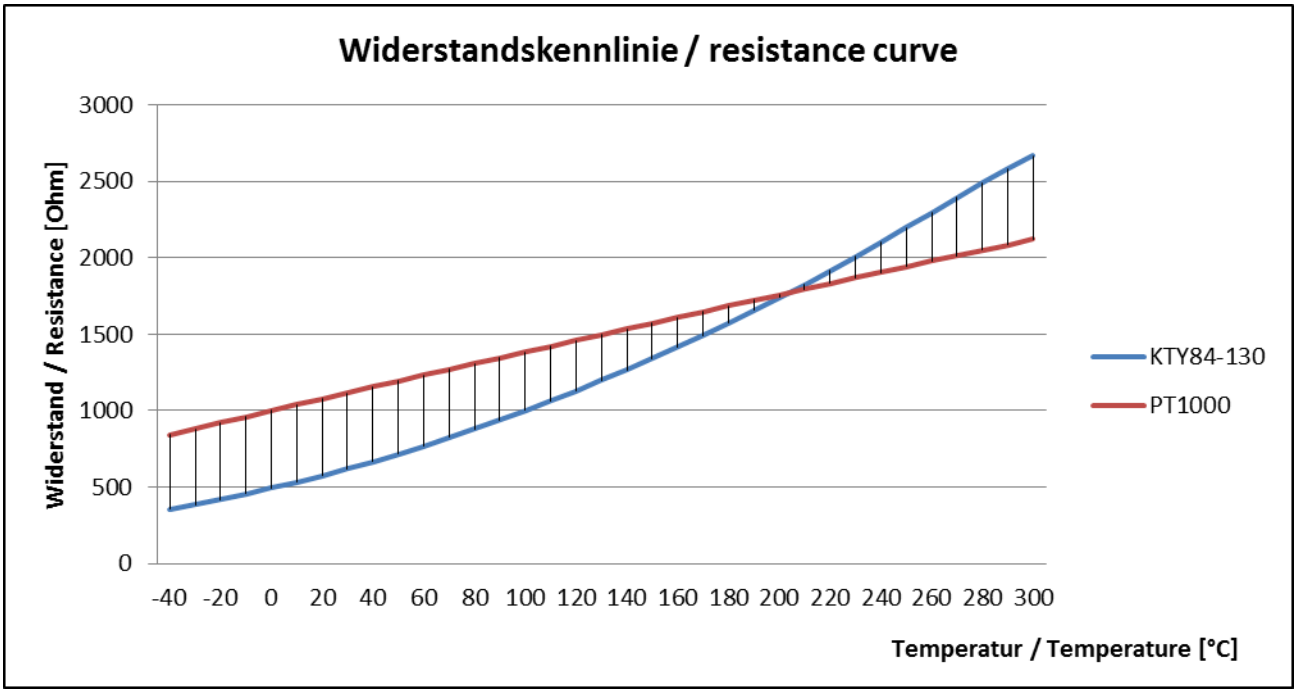

The motor temperature PT1000 is continuously monitored by the temperature sensor.
If the sensor is supplied by a measured current of 2 mA the above demonstrated resistance curve results

3.6. Main connection – terminal box

3.6.1. Terminal designation

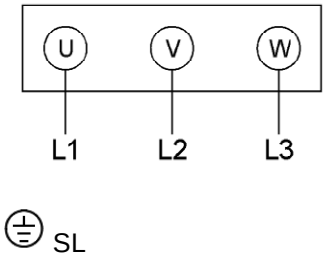

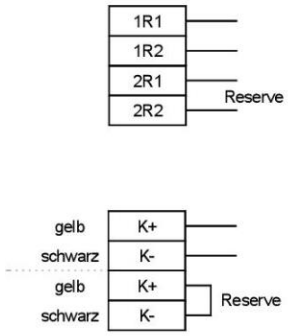

Terminal designation
Connection diagram

U V W	Power connection
K + K -	Temperature sensor (KT84-130)
R1/ R2	Temperature sensor (PT1000)
R2-1/ R2-2	Temperature sensor reserve (PT1000)
SL	Protective conductor

3.6.2. Terminal box version

Dependent of the rated motor currents the terminal box sizes can vary. The assignment of the terminal box number – the terminal box size – the drilling size for screw fittings as well as connection bolt sizes are demonstrated in the following section. EMC screw fittings should be used.

3.6.3. Terminal box measures

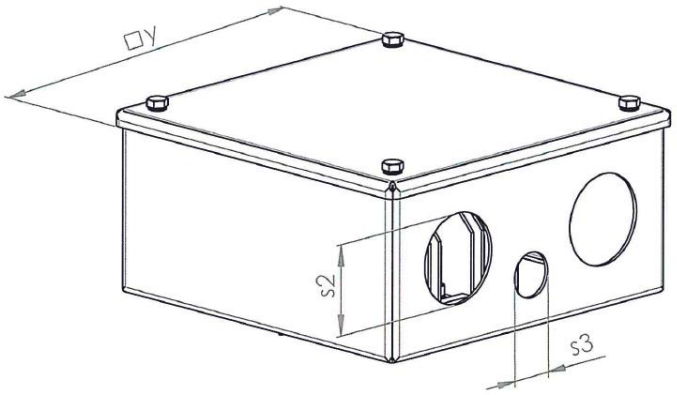

No.	Cable entry fitting		Terminal	Thread	
	□ y [mm]	g1 [mm] compare dimension sheets in chapter 4		s2 [mm]	s3 [mm]
10	197	206	3 x M8	1xM25x1,5	1xM25x1,5
12	197	206/238 [1)]	3 x M8	1xM40x1,5	1xM25x1,5
14	197	238	3 x M8	1xM63x1,5	1xM25x1,5
22	258	250	3 x M8	2xM40x1,5	1xM25x1,5
24	258	250	3 x M8	2xM63x1,5	1xM25x1,5
			Terminal	Drilling	
	□ y [mm]	g1 [mm] compare dimension sheets in chapter 4		s2 [mm]	s3 [mm]
30	215	270	3 x M6	2x Ø40,5	1x Ø 25,5
31	215	270	3 x M6	2x Ø51	1x Ø 25,5
32	255	280	3 x M10	2x Ø64	1x Ø 25,5
34	315	290	3 x M12	2x Ø76	1x Ø 25,5
40	295	308	3 x M10	1x Ø64	1x Ø 25,5
41	295	355	3 x M10	2x Ø64	1x Ø 25,5
43	295	345	3 x M12	2x Ø76	1x Ø 25,5
45	345	345	3 x M16	2x Ø76	1x Ø 25,5
50	365	387/441 [2)]	3 x M16	2x Ø76	1x Ø 25,5
52	425	387	6 x M16	3x Ø76	1x Ø 25,5
54	445	441	6 x M16	4x Ø76	1x Ø 25,5

[1)] 206 mm with the size 100, 238 mm with the size 132
[2)] 387 mm with the size 225, 441 mm with the size 280

3.6.4. Position terminal boxes and outlet direction main connection

The terminal box is on the N-side. The following terminal box positions are possible:

- Terminal box on top
- Terminal box on the left (with view to the D-side on the shaft end)
- Terminal box on the right (with view to the D-side on the shaft end)

The following directions of the main connection in dependence with the terminal box position can be configured (refer to product configurator).

Sizes 100 – 280

Cooling type	Position terminal box	Outlet direction main connection				
		Above	Below	To the left [3]	To the right [3]	N-side
Radially fitted external fan [1]	Above	-	-	☒	☒	☒ [2]
	To the left [3]	☒	☒	-	-	☒
	To the right [3]	☒	☒	-	-	☒
Water cooling	Above	-	-	☒	☒ [2]	☒
	To the left [3]	-	-	-	-	-
	To the right [3]	-	-	-	-	-
Axially fitted external fan	Above	-	-	☒	☒ [2]	-
	To the left [3]	☒	☒	-	-	-
	To the right [3]	☒	☒	-	-	-

[1] The position of the terminal box of motors with a radial fan is dependent of the cooling system position. (such as position of the terminal box „above“ is not possible if position cooling „above“)
[2] Preferred version
[3] **View to the D-side on the shaft end**

3.7. Fan data

The motors are available with the following types of fan:

- Standard fan motor for axial ventilation (standard for size 132-225, not available for size 280)
- Standard fan motor for radial ventilation (standard for size 280, not available for size 100)
- Axially integrated fan (standard for size 100, not available for size 280)

3.7.1. Standard fan motors

Blower connection for standard fan motors via terminal box

Connection diagram:
FCA 56A-2
FCA 80B-2

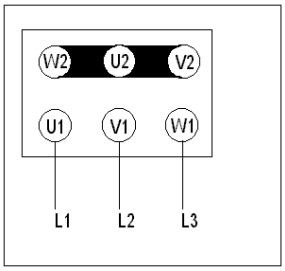

U V W Power connection

FCA 63B-2
FCA 71B-2

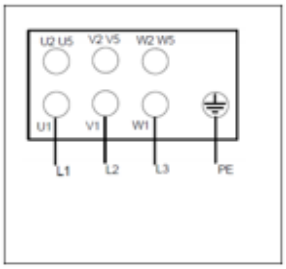

Standard fan motor for axial ventilation – cURus approved

Δ/Y 200-265V / 345-460V 50 // 60Hz

Size	Power [kW]	Rated current [A]	Fan motor	Rated input power [kW]	Volume flow rate [m³/min]	Stat. pressure [Pa]	Speed [1/min]	Spec. ratio
132	0,08 // 0,12	0,4 / 0,23 // 0,61 / 0,35	FCA 56A-2	0,16	5,15	514	2800	1

200/400V // 230/460V 50 // 60 Hz – IE3

Size	Power [kW]	Rated current [A]	Fan motor	Rated input power [kW]	Volume flow rate [m³/min]	Stat. pressure [Pa]	Speed [1/min]	Spec. ratio
160	0,25 // 0,25	1,3 / 1,65 // 1,1 / 0,55	FCA 63B-2	0,28	6,4	824	2825	1
180	0,55 // 0,55	2,7 / 1,35 // 2,4 / 1,2	FCA 71B-2	0,61	14,6	970	2825	1

Δ/Y 265-345V / 460-600V 50 // 60Hz

Size	Power [kW]	Rated current [A]	Fan motor	Rated input power [kW]	Volume flow rate [m³/min]	Stat. pressure [Pa]	Speed [1/min]	Spec. ratio
132	0,08 // 0,12	0,3 / 0,18 // 0,46 / 0,26	FCA 56A-2	0,16	5,15	514	2800	1

Δ/Y 230/400V // 265/460V 50 // 60Hz – IE3

Size	Power [kW]	Rated current [A]	Fan motor	Rated input power [kW]	Volume current [m³/min]	Stat. pressure [Pa]	Speed [1/min]	Spec. ratio
225	1,1 // 1,65	4,02 / 2,31 // 4,12 / 2,38	FCA 80B-2	1,19	27,5	1300	2947	1

The nominal currents are maximum values.

Standard fan motors for radial ventilation

200/400V // 230/460V 50 // 60 Hz – IE3

Size	Power [kW]	Rated current [A]	Fan motor	Rated input power [kW]	Volume flow rate [m³/min]	Stat. pressure [Pa]	Speed [1/min]	Spec. ratio
132	0,25 // 0,25	1,3 / 1,65 // 1,1 / 0,55	FCA 63B-2	0,28	6,4	824	2825	1
160	0,55 // 0,55	2,7 / 1,35 // 2,4 / 1,2	FCA 71B-2	0,61	14,6	970	2825	1

Δ/Y 230/400V // 265/460V 50 // 60Hz – IE3

Size	Power [kW]	Rated current [A]	Fan motor	Rated input power [kW]	Volume flow rate [m³/min]	Stat. pressure [Pa]	Speed [1/min]	Spec. ratio
180	1,1 // 1,65	4,02 / 2,31 // 4,12 / 2,38	FCA 80B-2	0,54	14,5	1048	2962	1
225	3 // 3,6	9,81 / 5,65 // 10,1 / 5,8	FCA 100LA-2	1,48	29,3	1350	2980	1

Y 400V 50Hz – IE3

Size	Power [kW]	Rated current [A]	Fan
280	5,5	10,5	D09

Y 480V 60Hz – IE3

Size	Power [kW]	Rated current [A]	Fan
280	6,6	10,3	D09

The nominal currents are maximum values.

3.7.2. Integrated axial blowers

Ventilation connections for integrated axial blowers

Connection diagram

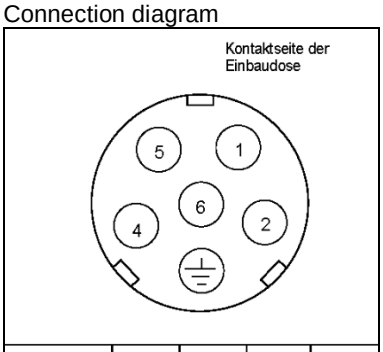

Pin	1	2	4	5
Signal	V	W		U
Pin	6	⏚		
Signal		⏚		

Integrated axial blowers

Y 400V // 480V 50 // 60Hz - UL certified

Size	Power [kW]	Nominal current [A]
100	0,043 // 0,054	0,13 // 0,14
132	0,15 // 0,24	0,26 // 0,33

Y 400V // 460V 50 // 60Hz

Size	Power [kW]	Nominal current [A]
160	0.47 // 0.54	0.7 // 0.75
180	0.78 // 0.91	1.3 // 1.3
225	1.1 // 1.4	2.1 // 2

The nominal currents are maximum values.

3.7.3. Filter

Flat filter DA1-132-180

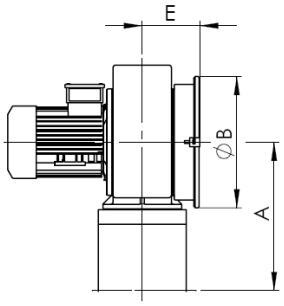

Filter to N-side

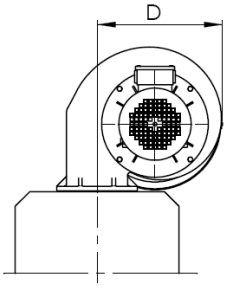

View towards D-side

Dimensions for fan mounting at top or on the side

Motor size	Fan type	A	Ø B	D	E
132	BFB 519	243	210	214	105
160	BFB 635	280	240	237	124
180	BFB 752	325	284	271	124

Flat filter DA1-225-280

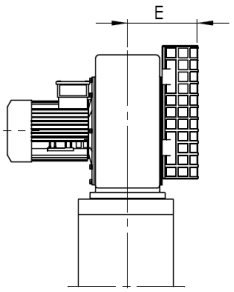

Filter to N-side

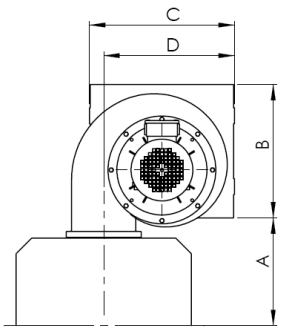

View towards D-side

Dimensions for fan mounting at top or on the side

Motor size	Fan type	A	B	C	D	E
225	BFB 880	272	337	366	330	178
280	D 09	333	337	406	384	271

Rectangle filter DA1-132-280

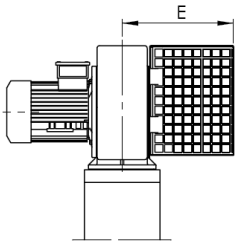

Filter to N-side

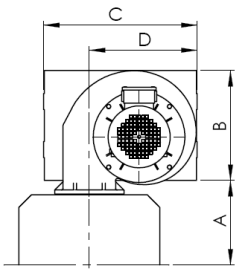

View towards D-side

Dimensions for fan mounting at top or on the side

Motor size	Fan type	A	B	C	D	E
132	BFB 519	153	207	306	213	163
160	BFB 635	186	237	338	237	189
180	BFB 752	215	277	386	271	280
225	BFB 880	272	337	476	332	410
280	D 09	333	337	476	404	431

Note: At IP 54 motors the filter mat „rough“ will be applicable, at IP 23 the filter mat „fine“ will be applicable.

4. Dimension drawings

4.1. Dimension drawings DA1-100

DA1..100..54I type IMB3/IM B5 standard

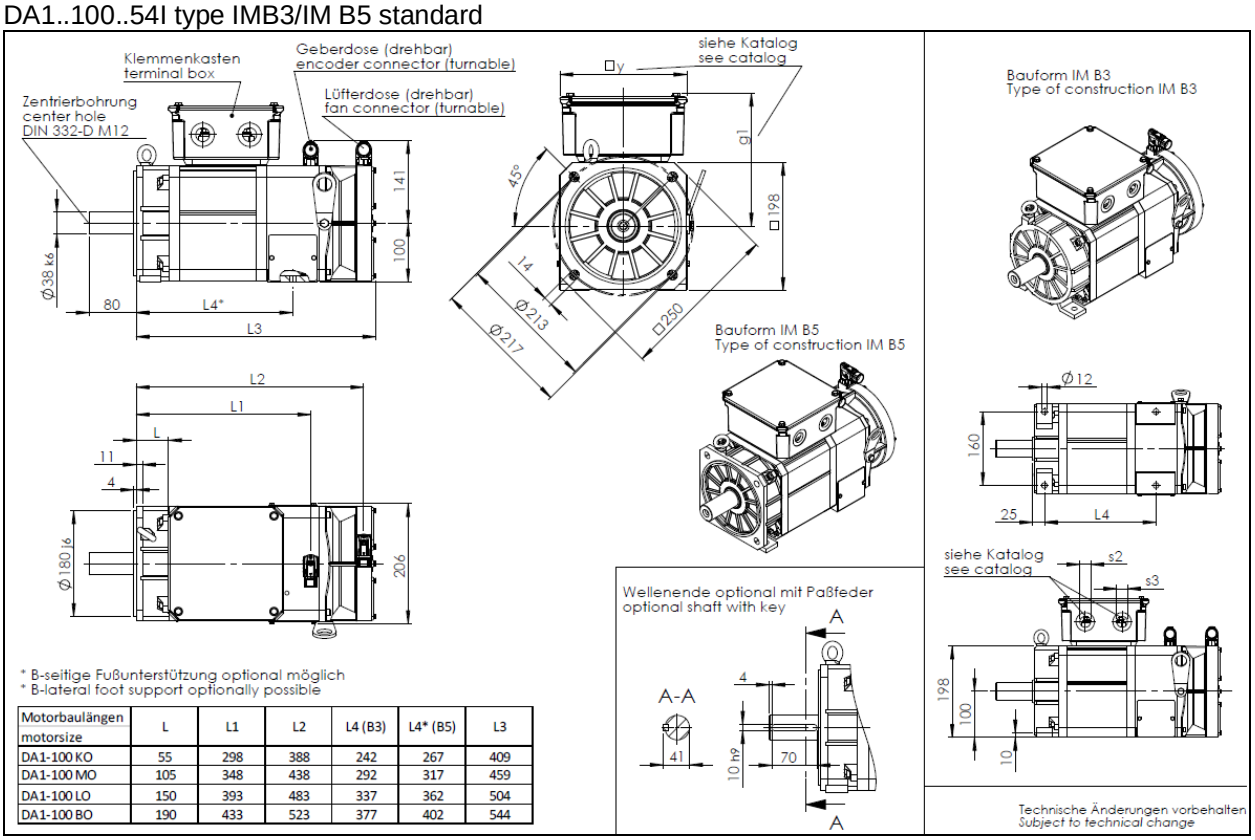

Motorbaulängen motorsize	L	L1	L2	L4 (B3)	L4* (B5)	L3
DA1-100 KO	55	298	388	242	267	409
DA1-100 MO	105	348	438	292	317	459
DA1-100 LO	150	393	483	337	362	504
DA1-100 BO	190	433	523	377	402	544

DA1-100..54W type IMB3/IMB5 standard

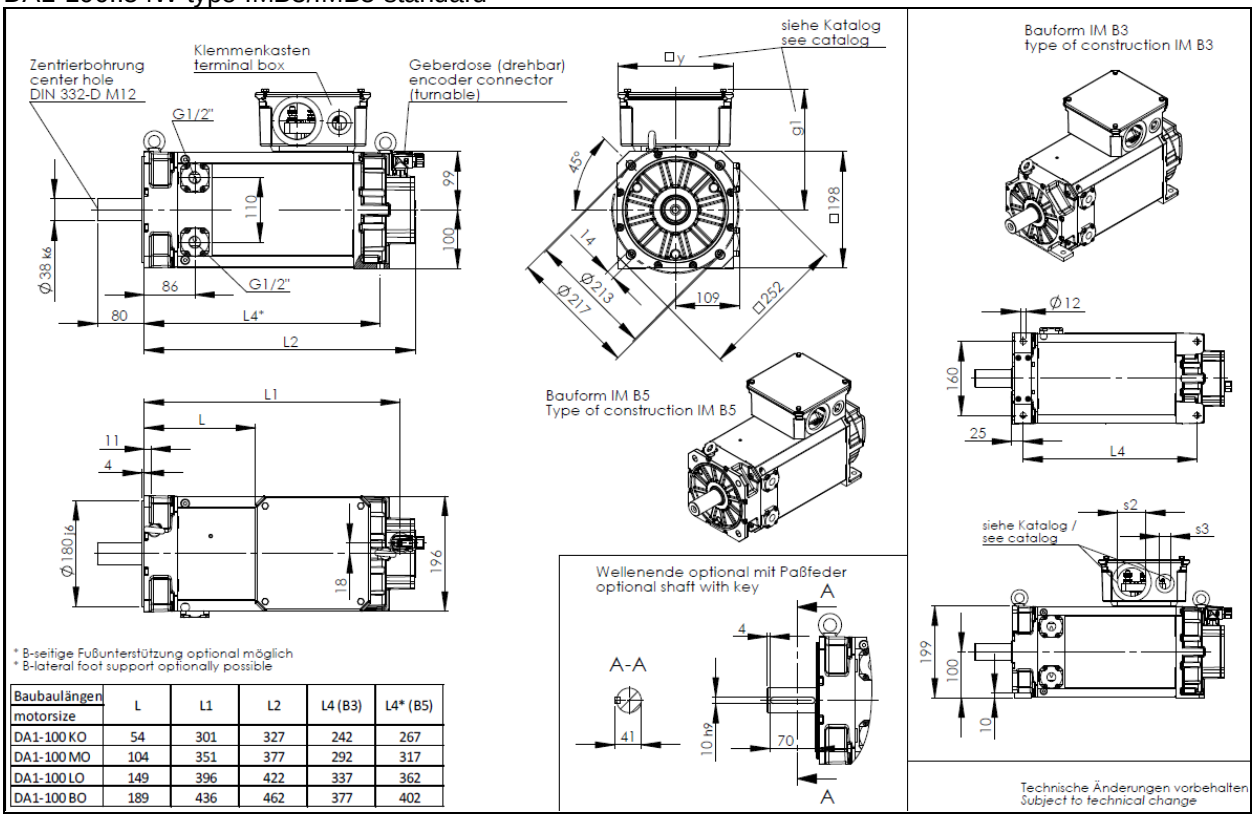

Baubaulängen motorsize	L	L1	L2	L4 (B3)	L4* (B5)
DA1-100 KO	54	301	327	242	267
DA1-100 MO	104	351	377	292	317
DA1-100 LO	149	396	422	337	362
DA1-100 BO	189	436	462	377	402

4.2. Dimension drawings DA1-132

DA1-132..23A type IMB3/IMB5 standard

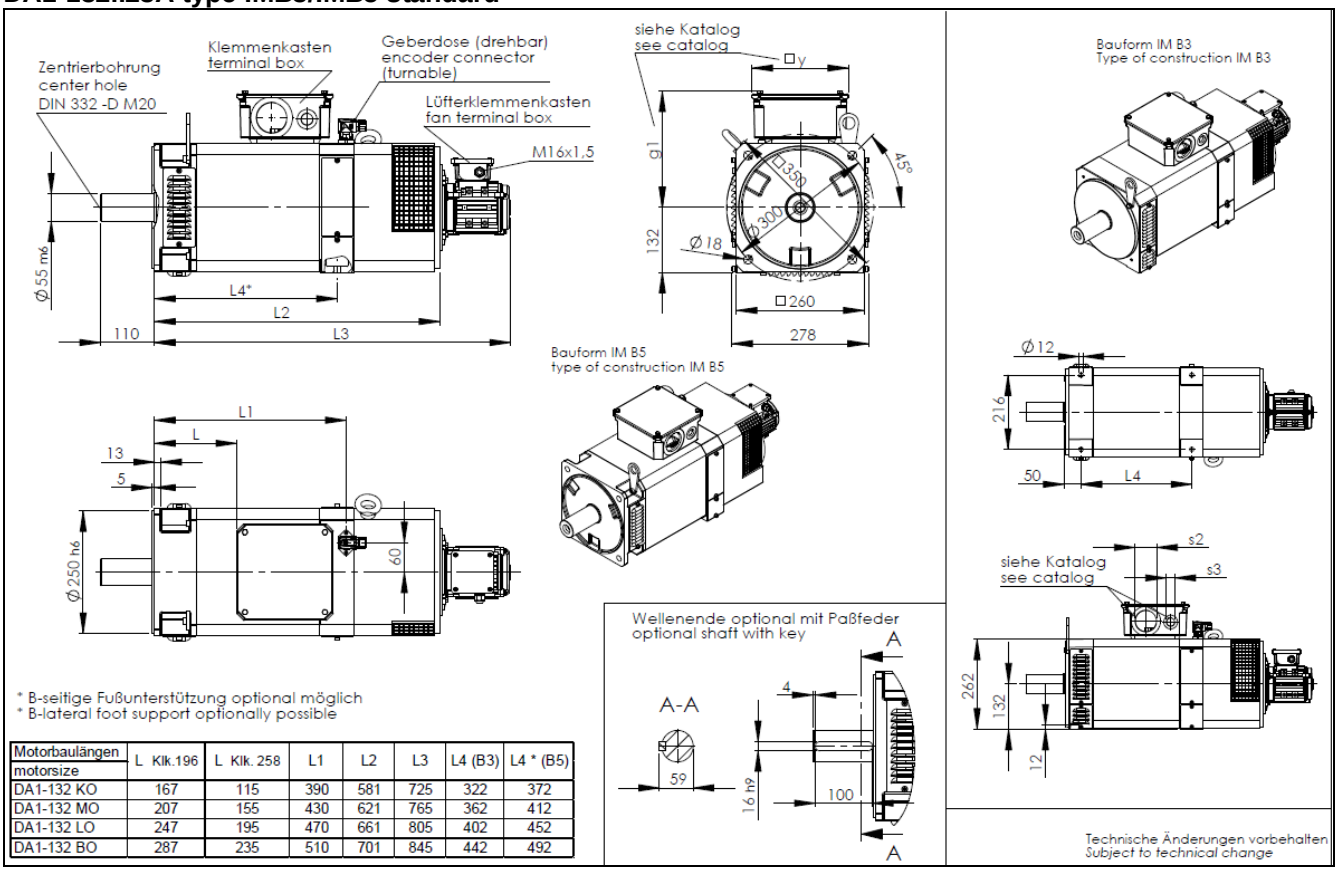

Motorbaulängen / motorsize	L Klk.196	L Klk. 258	L1	L2	L3	L4 (B3)	L4 * (B5)
DA1-132 KO	167	115	390	581	725	322	372
DA1-132 MO	207	155	430	621	765	362	412
DA1-132 LO	247	195	470	661	805	402	452
DA1-132 BO	287	235	510	701	845	442	492

DA1-132..23I type IMB3/IMB5 standard

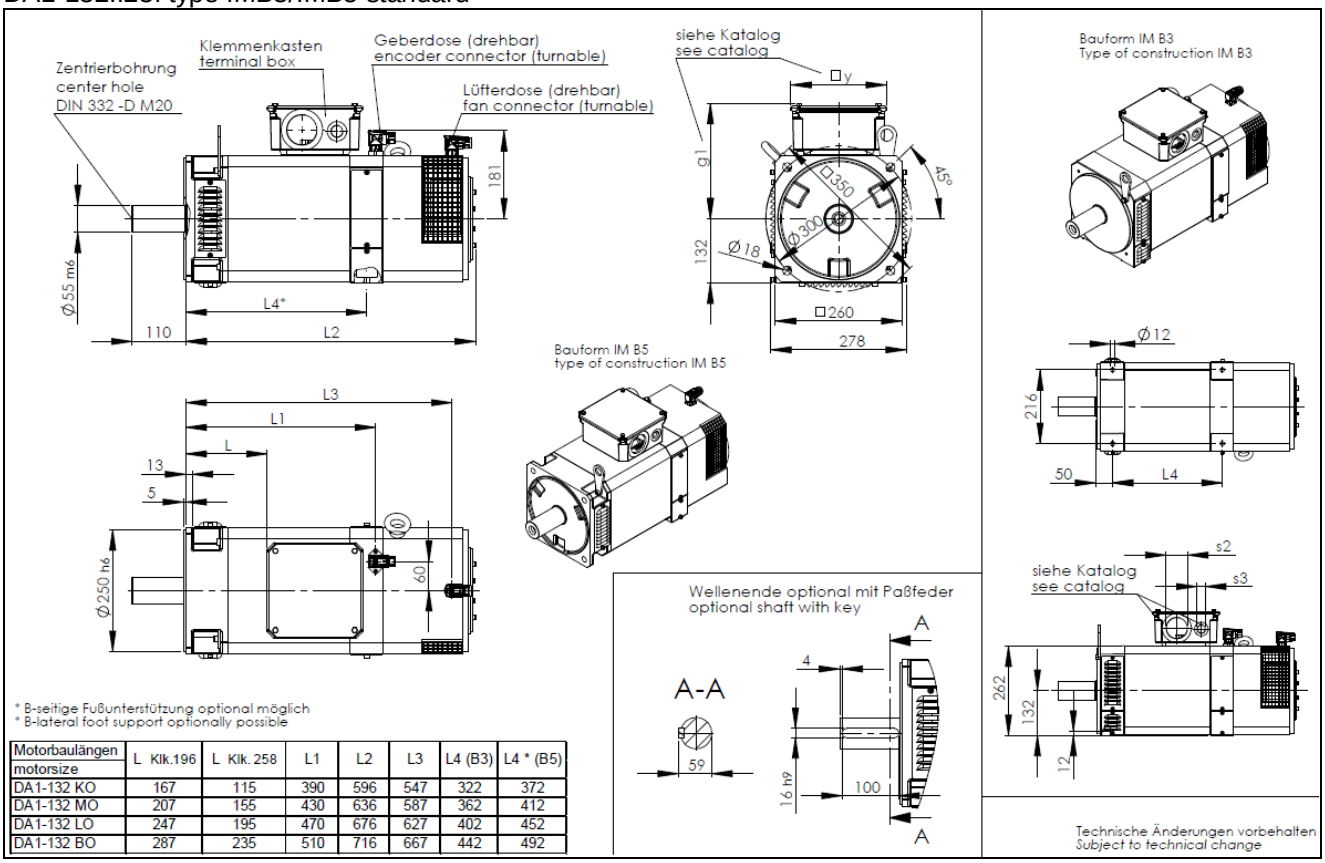

Motorbaulängen / motorsize	L Klk.196	L Klk. 258	L1	L2	L3	L4 (B3)	L4 * (B5)
DA1-132 KO	167	115	390	596	547	322	372
DA1-132 MO	207	155	430	636	587	362	412
DA1-132 LO	247	195	470	676	627	402	452
DA1-132 BO	287	235	510	716	667	442	492

DA1-132..23R type IMB3/IMB5 standard

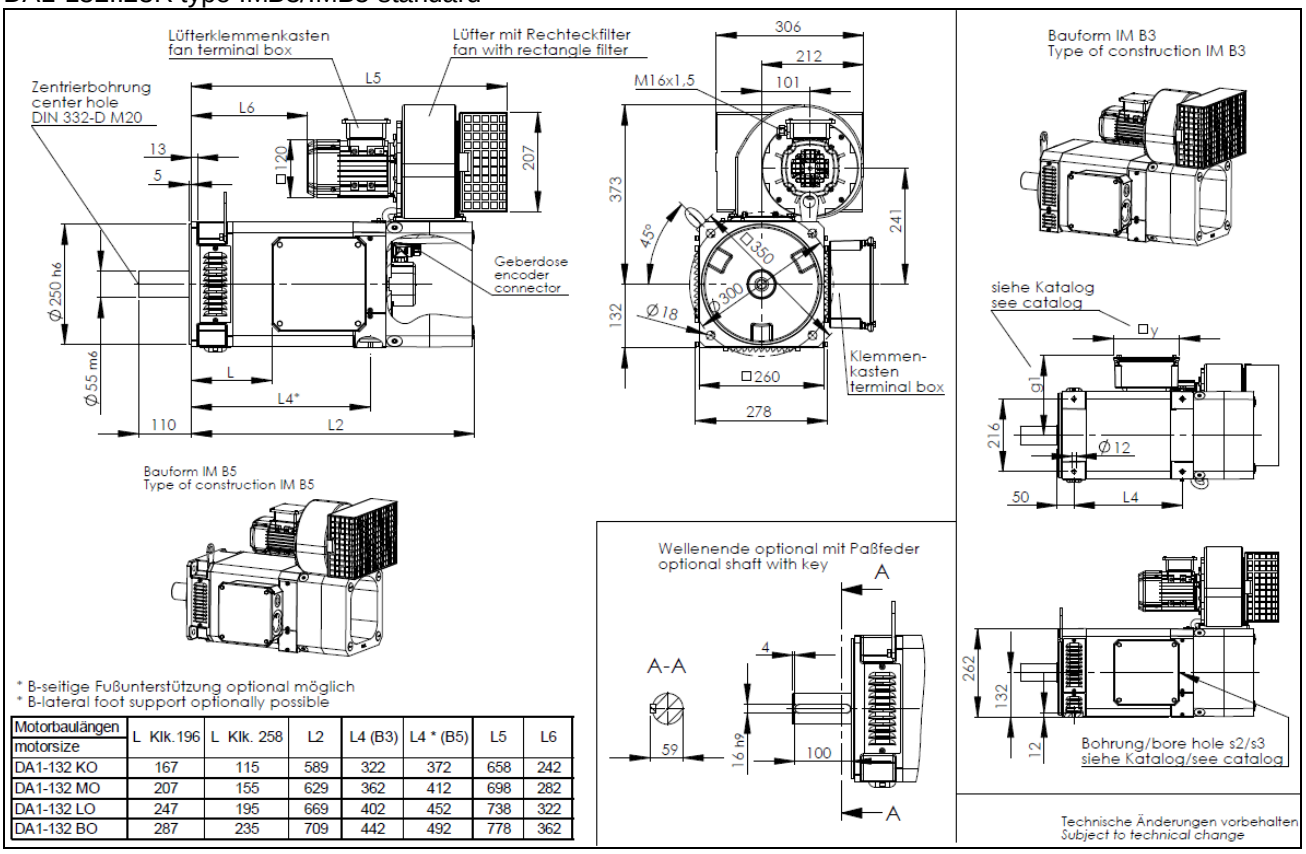

* B-seitige Fußunterstützung optional möglich
* B-lateral foot support optionally possible

Motorbaulängen / motorsize	L Klk.196	L Klk. 258	L2	L4 (B3)	L4 * (B5)	L5	L6
DA1-132 KO	167	115	589	322	372	658	242
DA1-132 MO	207	155	629	362	412	698	282
DA1-132 LO	247	195	669	402	452	738	322
DA1-132 BO	287	235	709	442	492	778	362

DA1-132..54A type IMB3/IMB5 standard

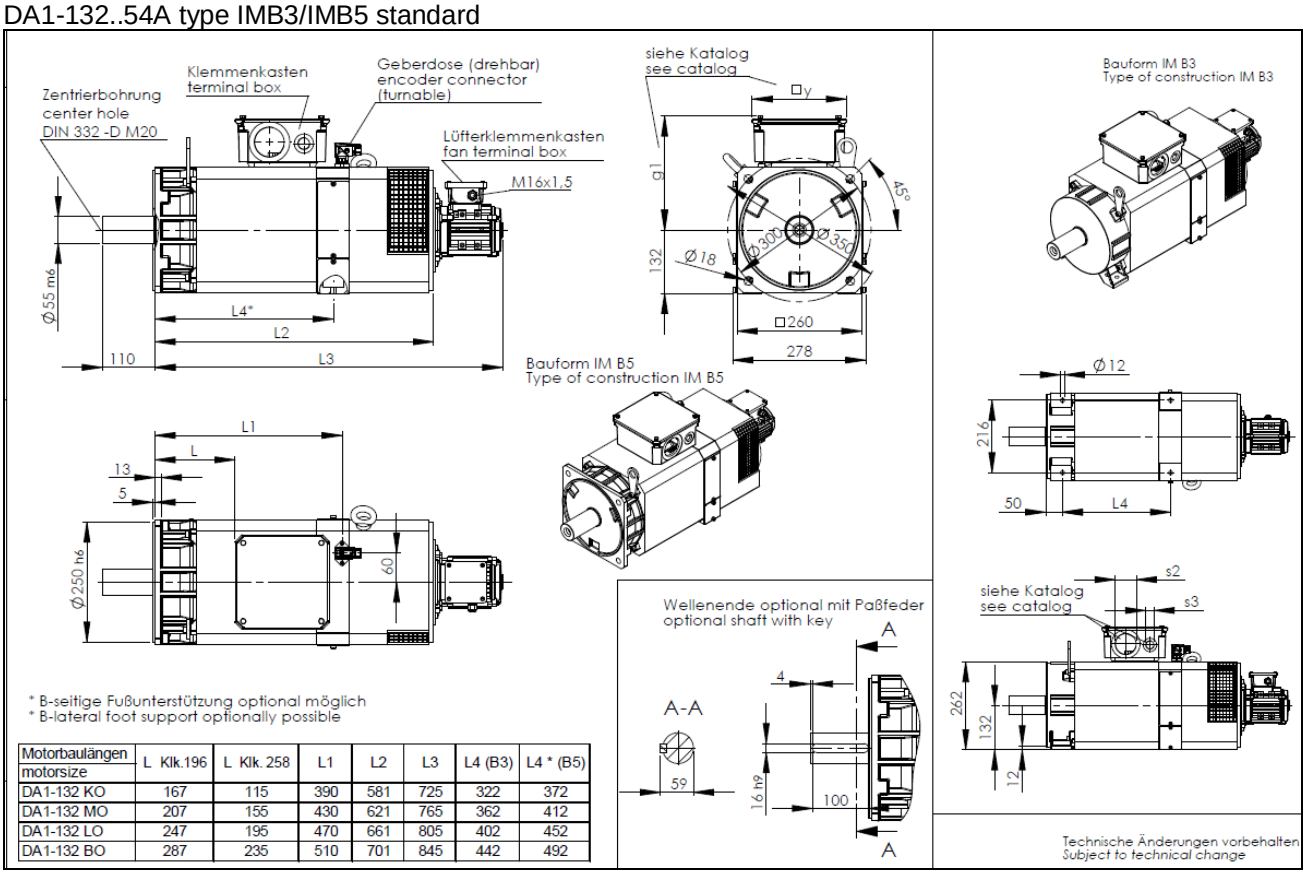

* B-seitige Fußunterstützung optional möglich
* B-lateral foot support optionally possible

Motorbaulängen / motorsize	L Klk.196	L Klk. 258	L1	L2	L3	L4 (B3)	L4 * (B5)
DA1-132 KO	167	115	390	581	725	322	372
DA1-132 MO	207	155	430	621	765	362	412
DA1-132 LO	247	195	470	661	805	402	452
DA1-132 BO	287	235	510	701	845	442	492

DA1-132..54I type IMB3/IMB5 standard

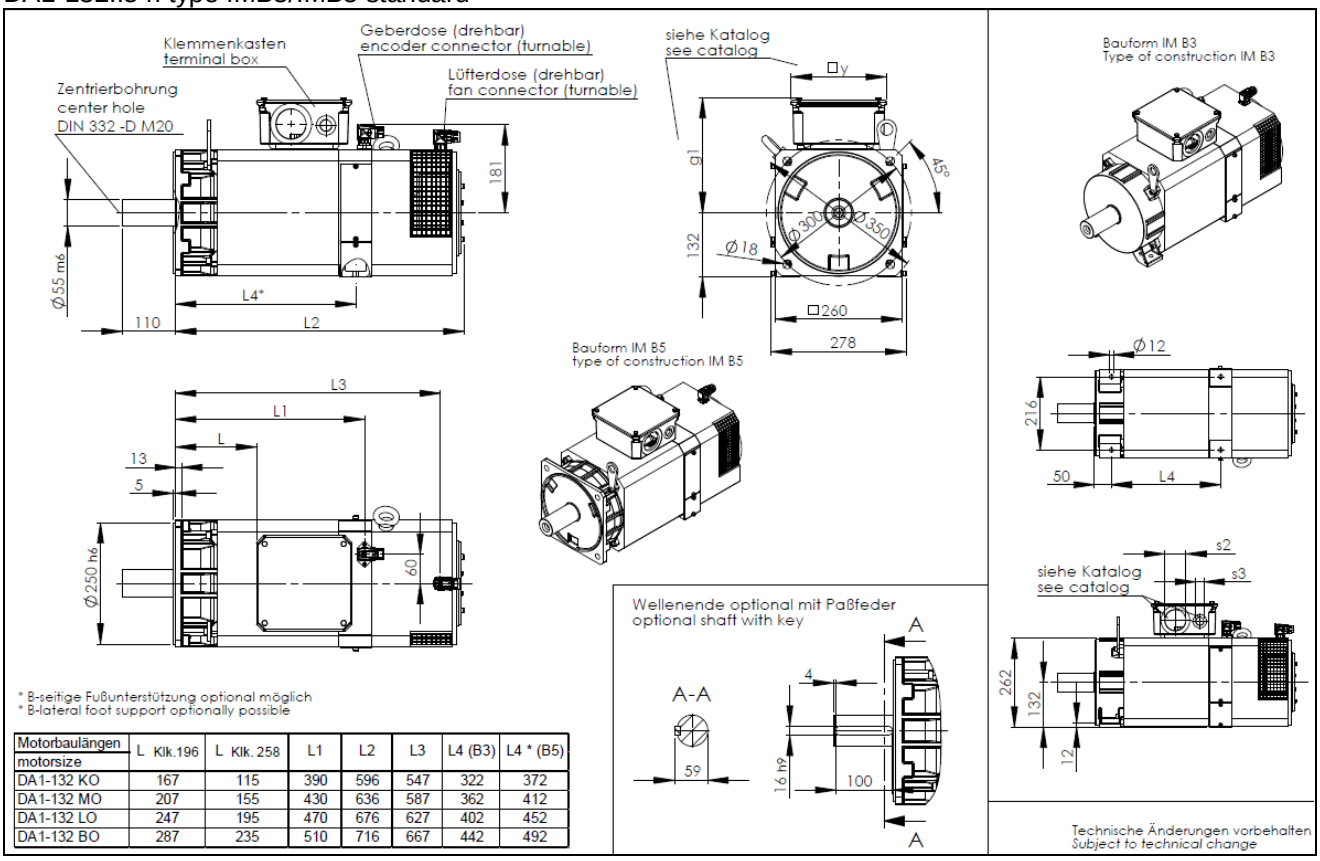

Motorbaulängen / motorsize	L Klk.196	L Klk. 258	L1	L2	L3	L4 (B3)	L4 * (B5)
DA1-132 KO	167	115	390	596	547	322	372
DA1-132 MO	207	155	430	636	587	362	412
DA1-132 LO	247	195	470	676	627	402	452
DA1-132 BO	287	235	510	716	667	442	492

DA1-132..54R type IMB3/IMB5 standard

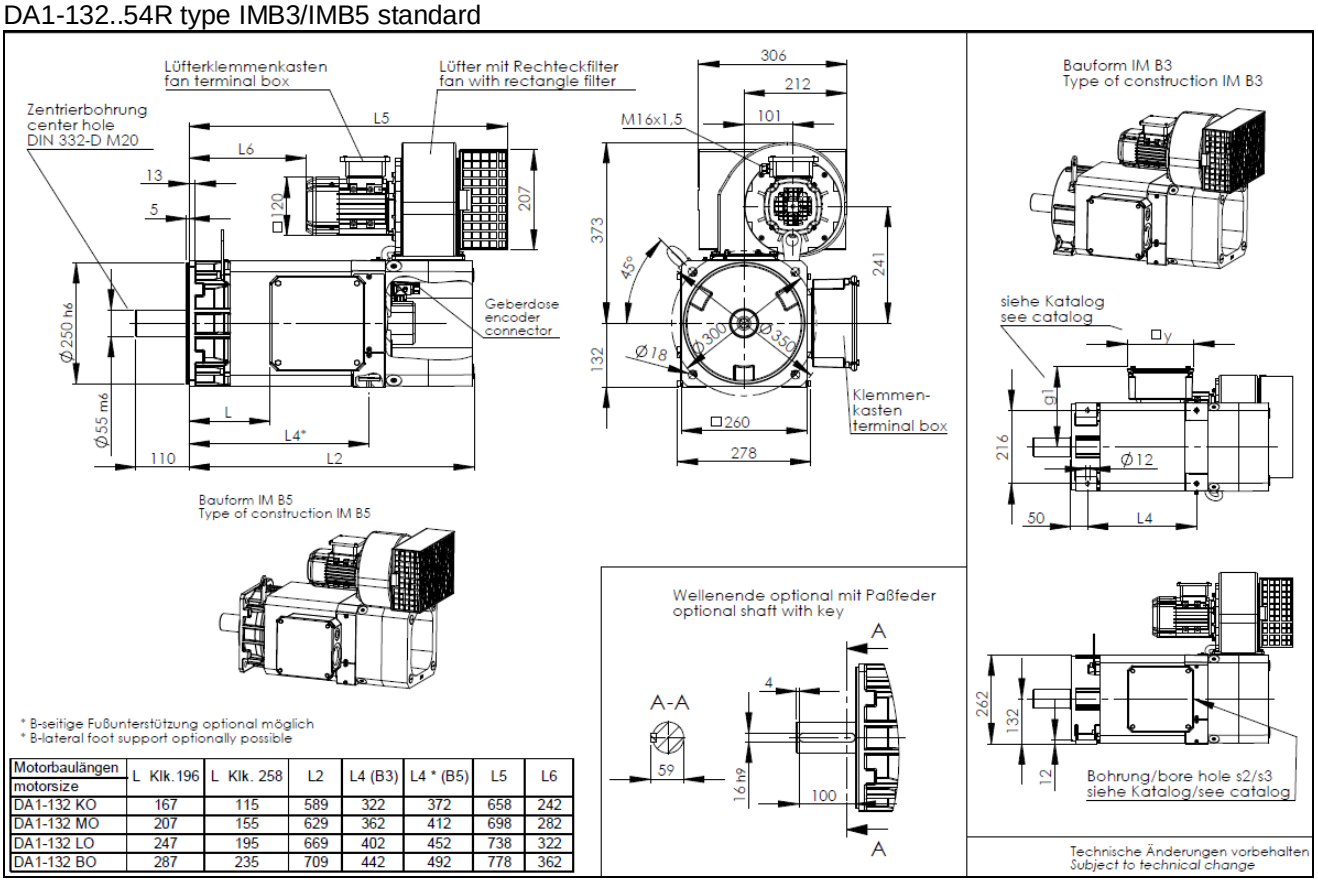

Motorbaulängen / motorsize	L Klk.196	L Klk. 258	L2	L4 (B3)	L4 * (B5)	L5	L6
DA1-132 KO	167	115	589	322	372	658	242
DA1-132 MO	207	155	629	362	412	698	282
DA1-132 LO	247	195	669	402	452	738	322
DA1-132 BO	287	235	709	442	492	778	362

DA1-132..54W type IMB3/IMB5 standard

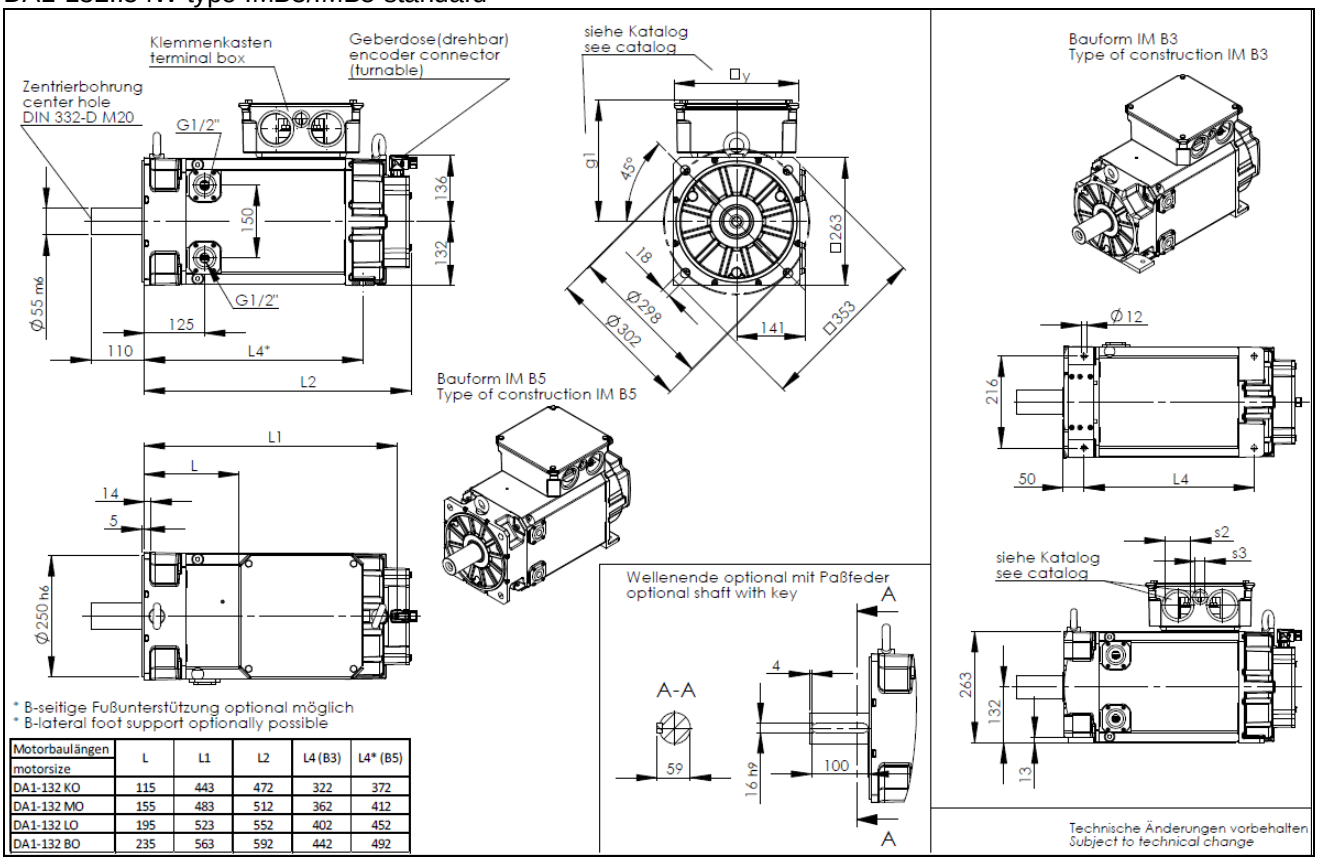

* B-seitige Fußunterstützung optional möglich
* B-lateral foot support optionally possible

Motorbaulängen / motorsize	L	L1	L2	L4 (B3)	L4* (B5)
DA1-132 KO	115	443	472	322	372
DA1-132 MO	155	483	512	362	412
DA1-132 LO	195	523	552	402	452
DA1-132 BO	235	563	592	442	492

4.3. Dimension drawings DA1-160

DA1-160..23A type IMB3/IMB5 standard

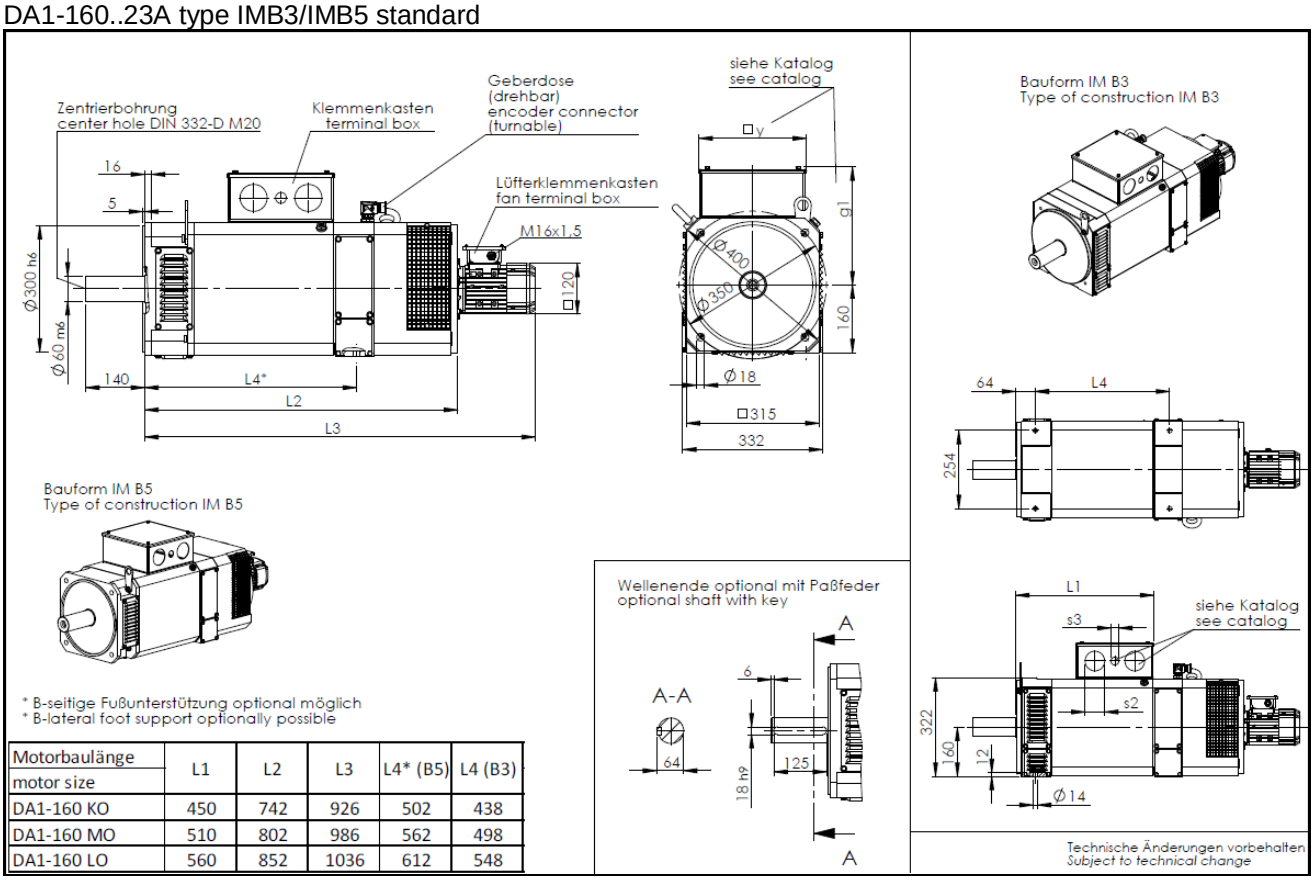

* B-seitige Fußunterstützung optional möglich
* B-lateral foot support optionally possible

Motorbaulänge / motor size	L1	L2	L3	L4* (B5)	L4 (B3)
DA1-160 KO	450	742	926	502	438
DA1-160 MO	510	802	986	562	498
DA1-160 LO	560	852	1036	612	548

DA1-160..23I type IMB3/IMB5 standard

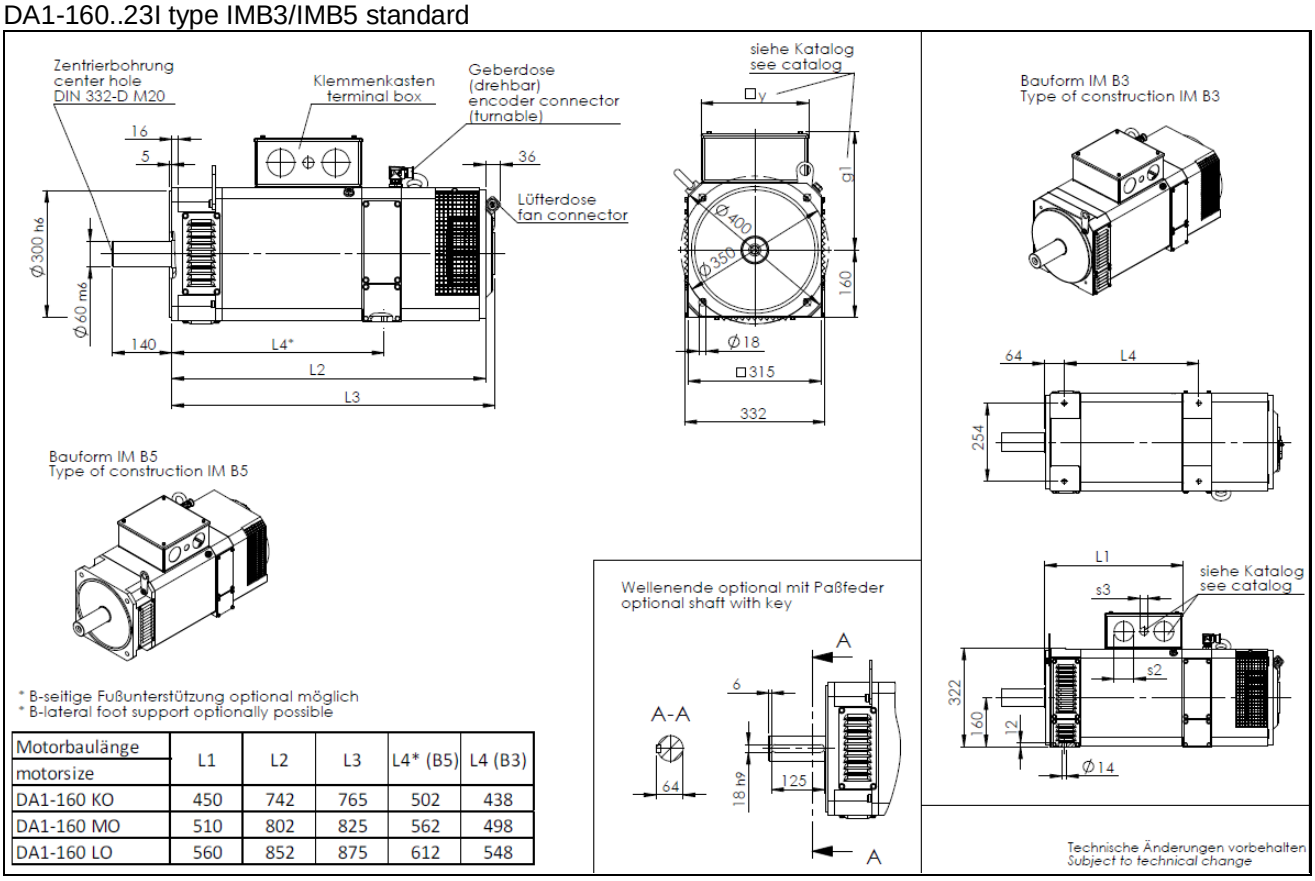

* B-seitige Fußunterstützung optional möglich
* B-lateral foot support optionally possible

Motorbaulänge / motorsize	L1	L2	L3	L4* (B5)	L4 (B3)
DA1-160 KO	450	742	765	502	438
DA1-160 MO	510	802	825	562	498
DA1-160 LO	560	852	875	612	548

DA1-160..23R type IMB3/IMB5 standard

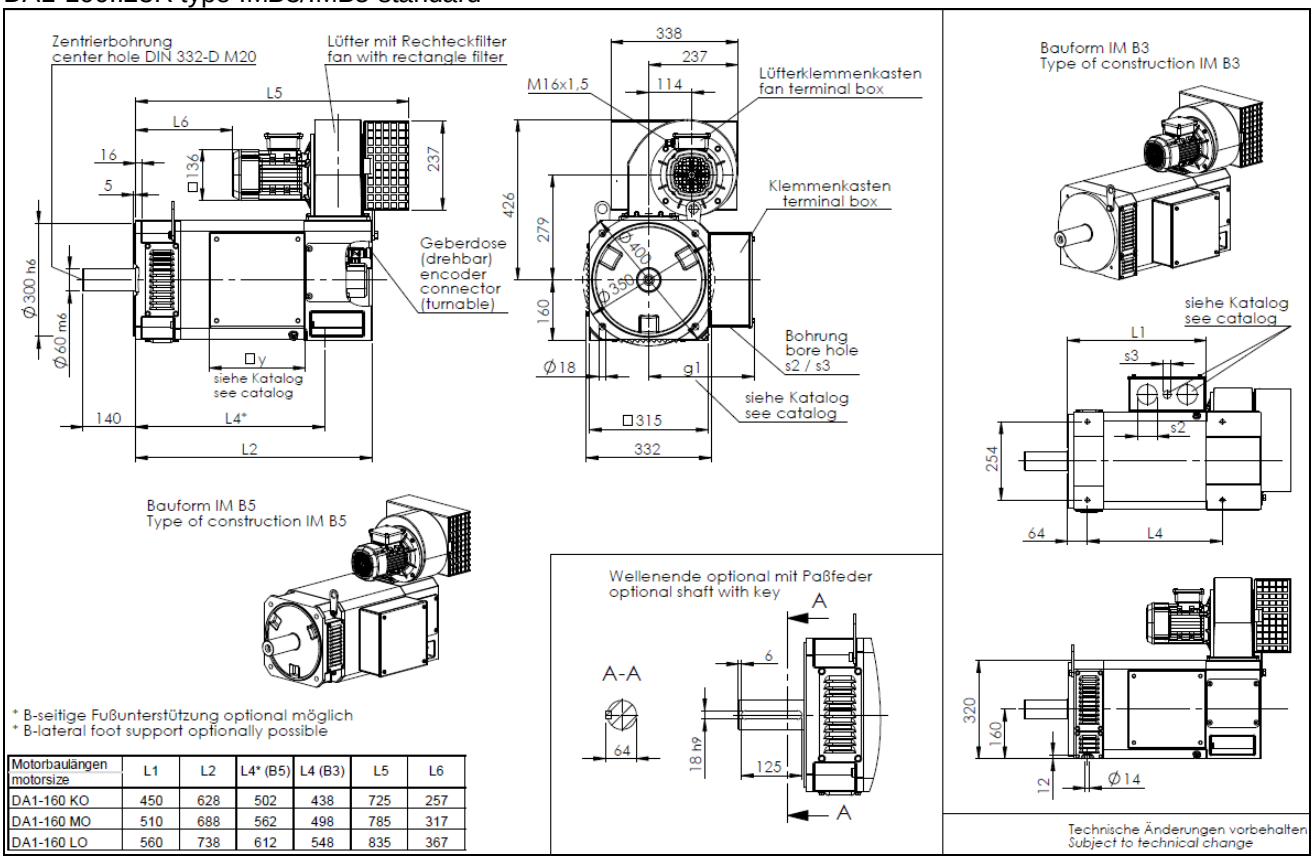

* B-seitige Fußunterstützung optional möglich
* B-lateral foot support optionally possible

Motorbaulängen motorsize	L1	L2	L4* (B5)	L4 (B3)	L5	L6
DA1-160 KO	450	628	502	438	725	257
DA1-160 MO	510	688	562	498	785	317
DA1-160 LO	560	738	612	548	835	367

DA1-160..54A type IMB3/IMB5 standard

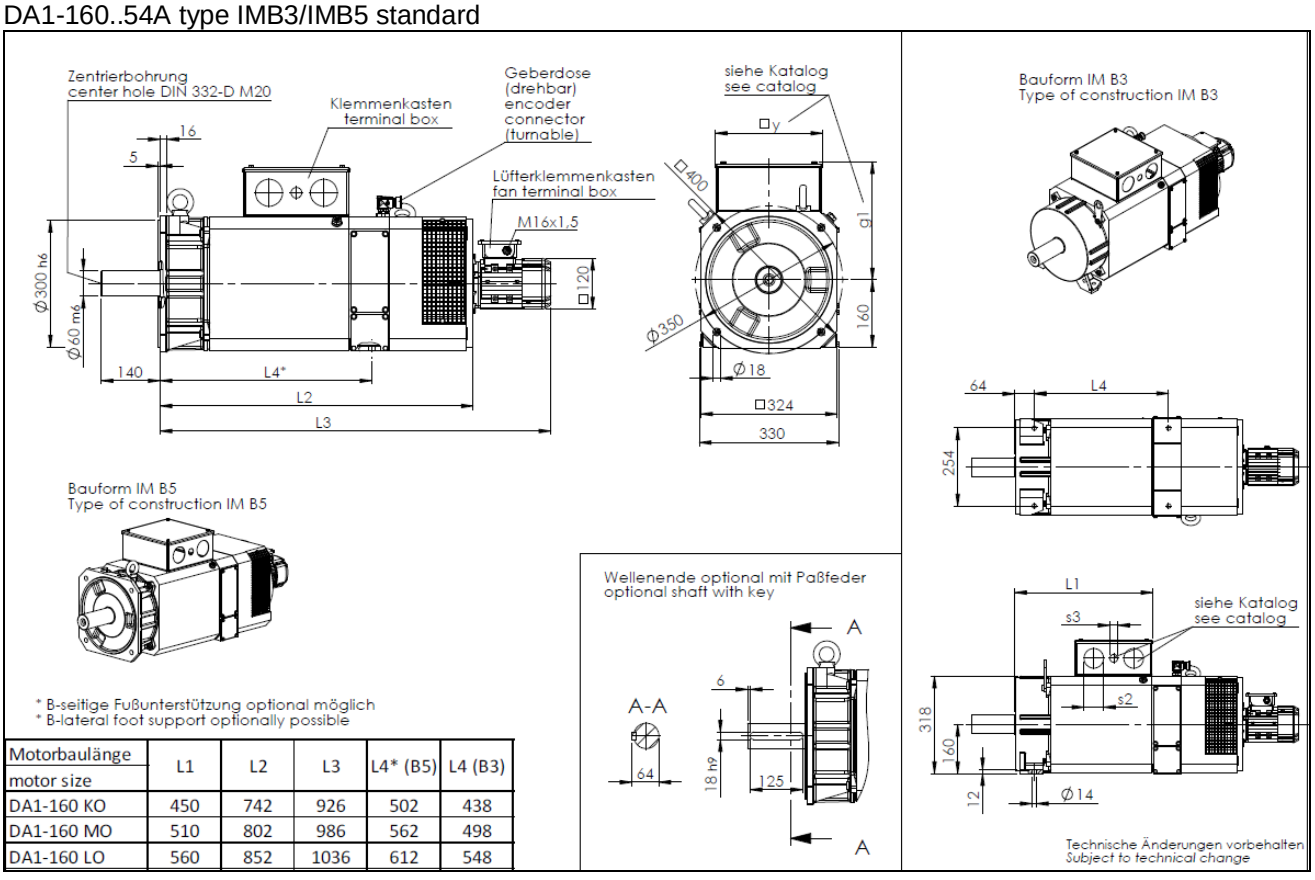

* B-seitige Fußunterstützung optional möglich
* B-lateral foot support optionally possible

Motorbaulänge motor size	L1	L2	L3	L4* (B5)	L4 (B3)
DA1-160 KO	450	742	926	502	438
DA1-160 MO	510	802	986	562	498
DA1-160 LO	560	852	1036	612	548

DA1-160..54I type IMB3/IMB5

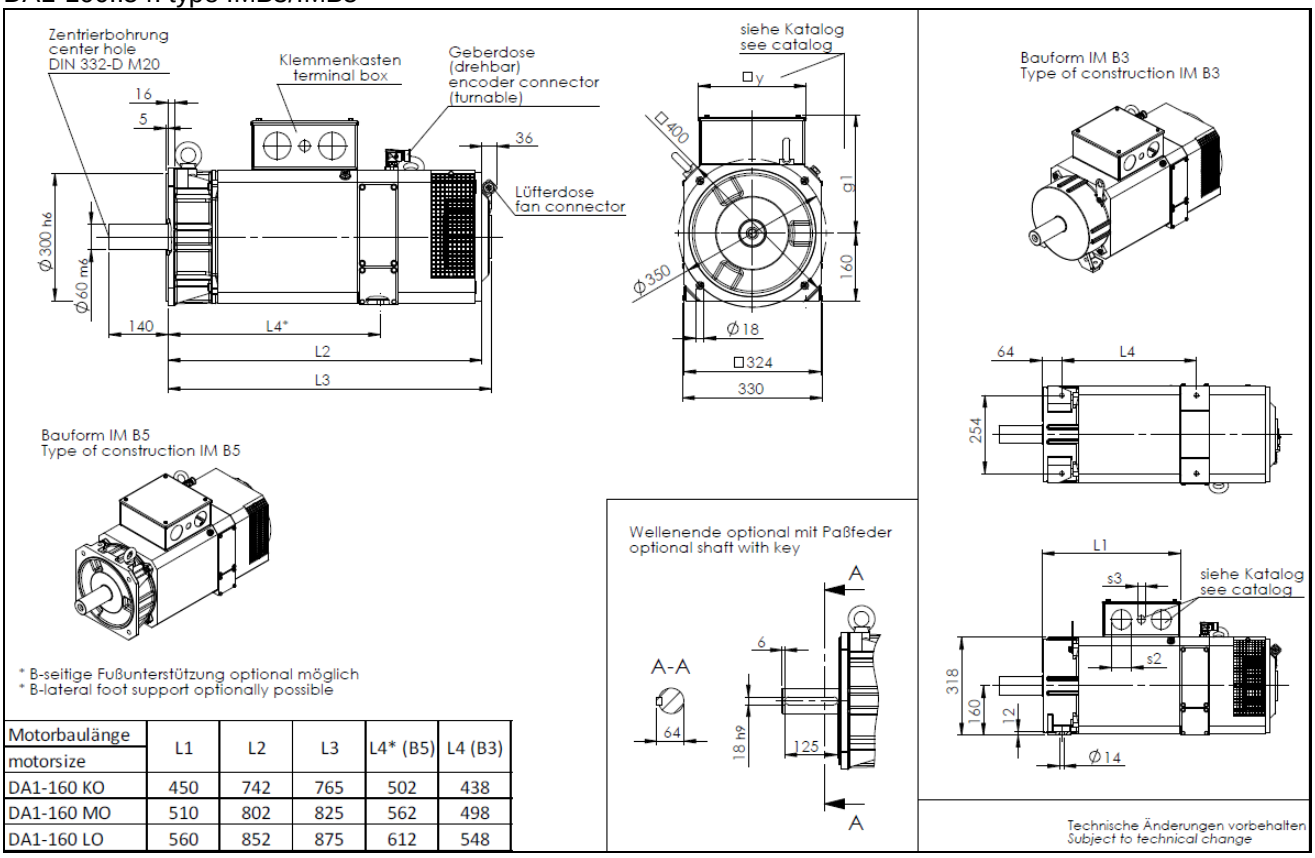

Motorbaulänge / motorsize	L1	L2	L3	L4* (B5)	L4 (B3)
DA1-160 KO	450	742	765	502	438
DA1-160 MO	510	802	825	562	498
DA1-160 LO	560	852	875	612	548

DA1-160..54R type IMB3/IMB5

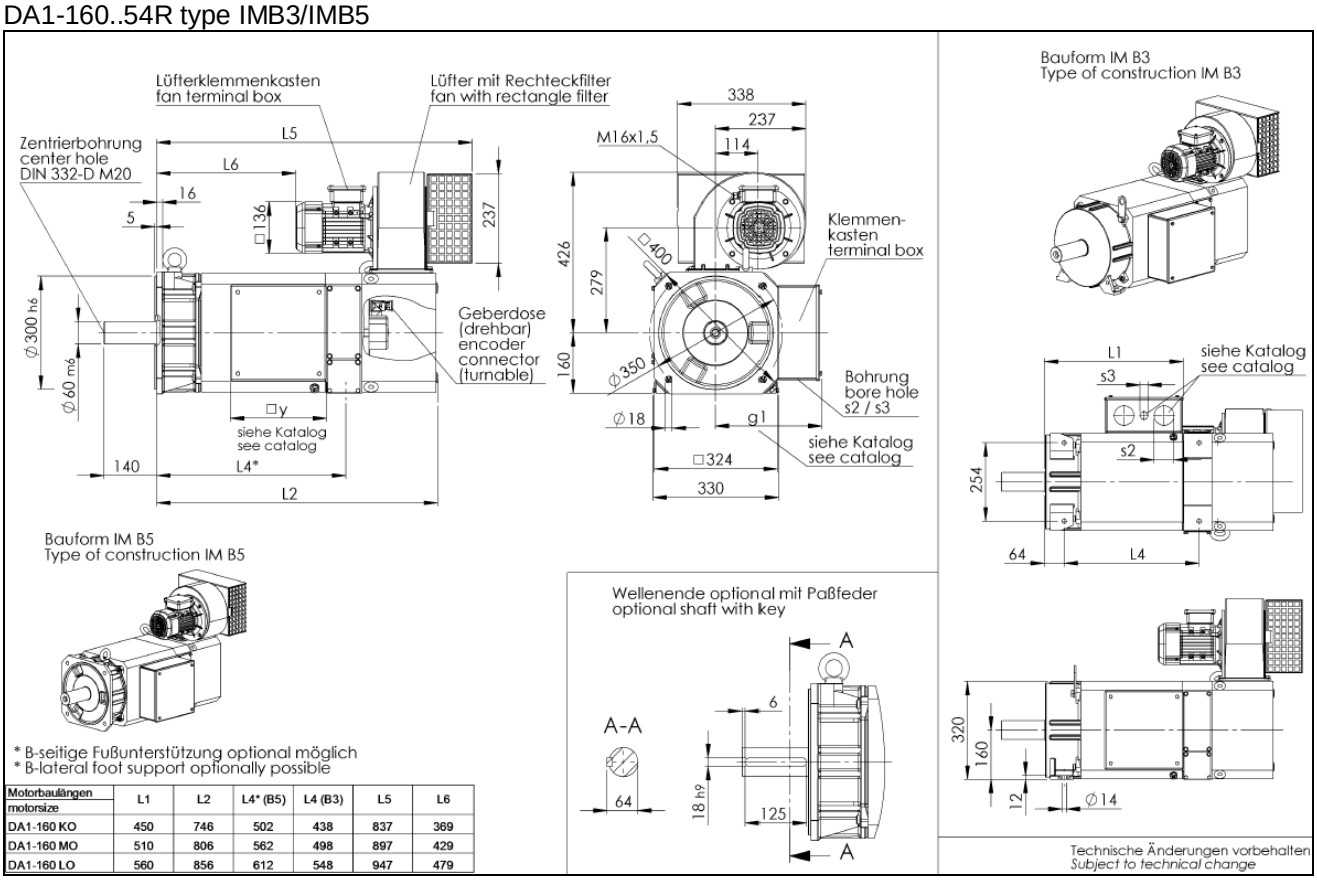

Motorbaulängen / motorsize	L1	L2	L4* (B5)	L4 (B3)	L5	L6
DA1-160 KO	450	746	502	438	837	369
DA1-160 MO	510	806	562	498	897	429
DA1-160 LO	560	856	612	548	947	479

DA1-160..54W type IMB3/IMB5

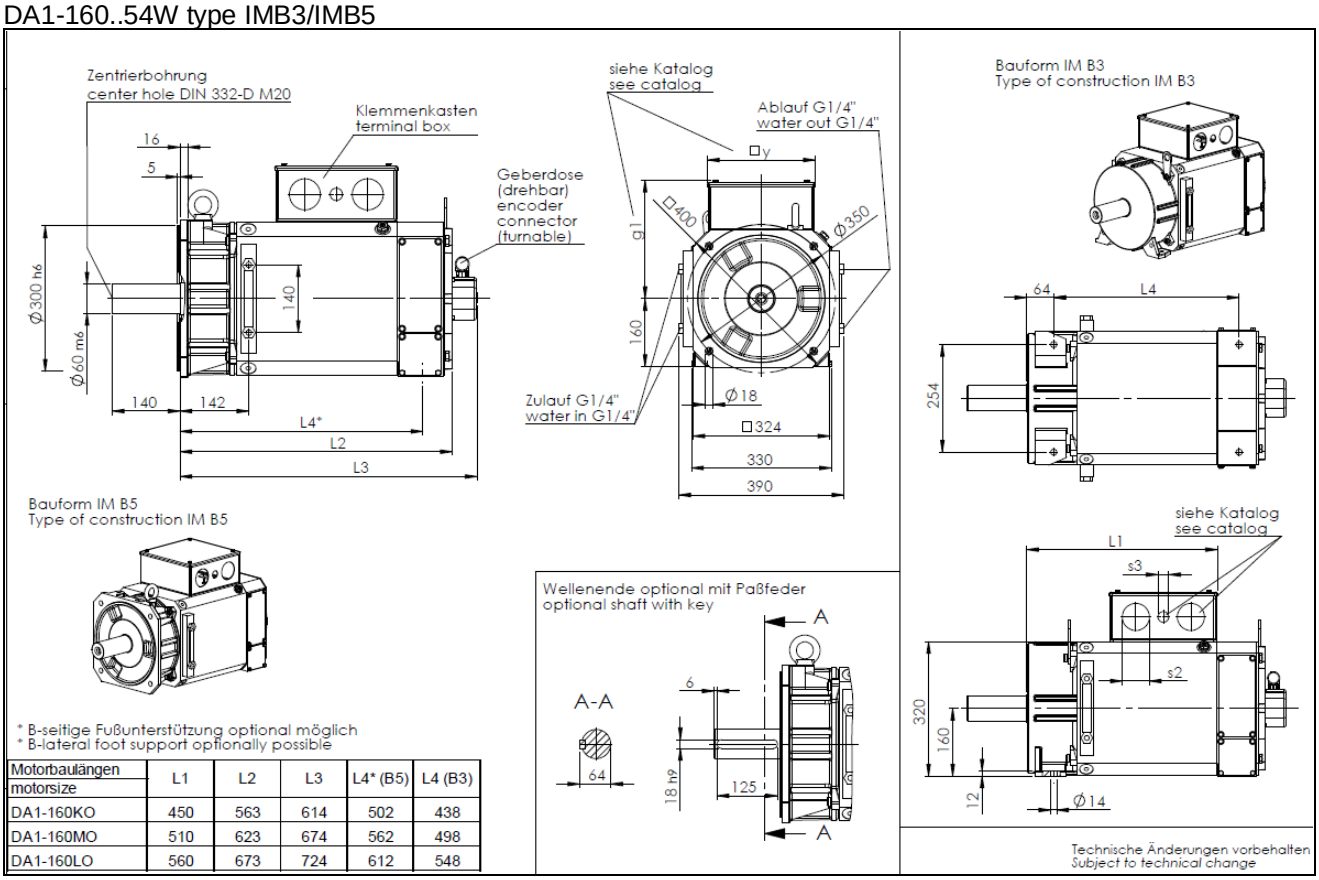

* B-seitige Fußunterstützung optional möglich
* B-lateral foot support optionally possible

Motorbaulängen / motorsize	L1	L2	L3	L4* (B5)	L4 (B3)
DA1-160KO	450	563	614	502	438
DA1-160MO	510	623	674	562	498
DA1-160LO	560	673	724	612	548

4.4. Dimension drawings DA1 180

DA1-180..23A type IMB3/IMB5

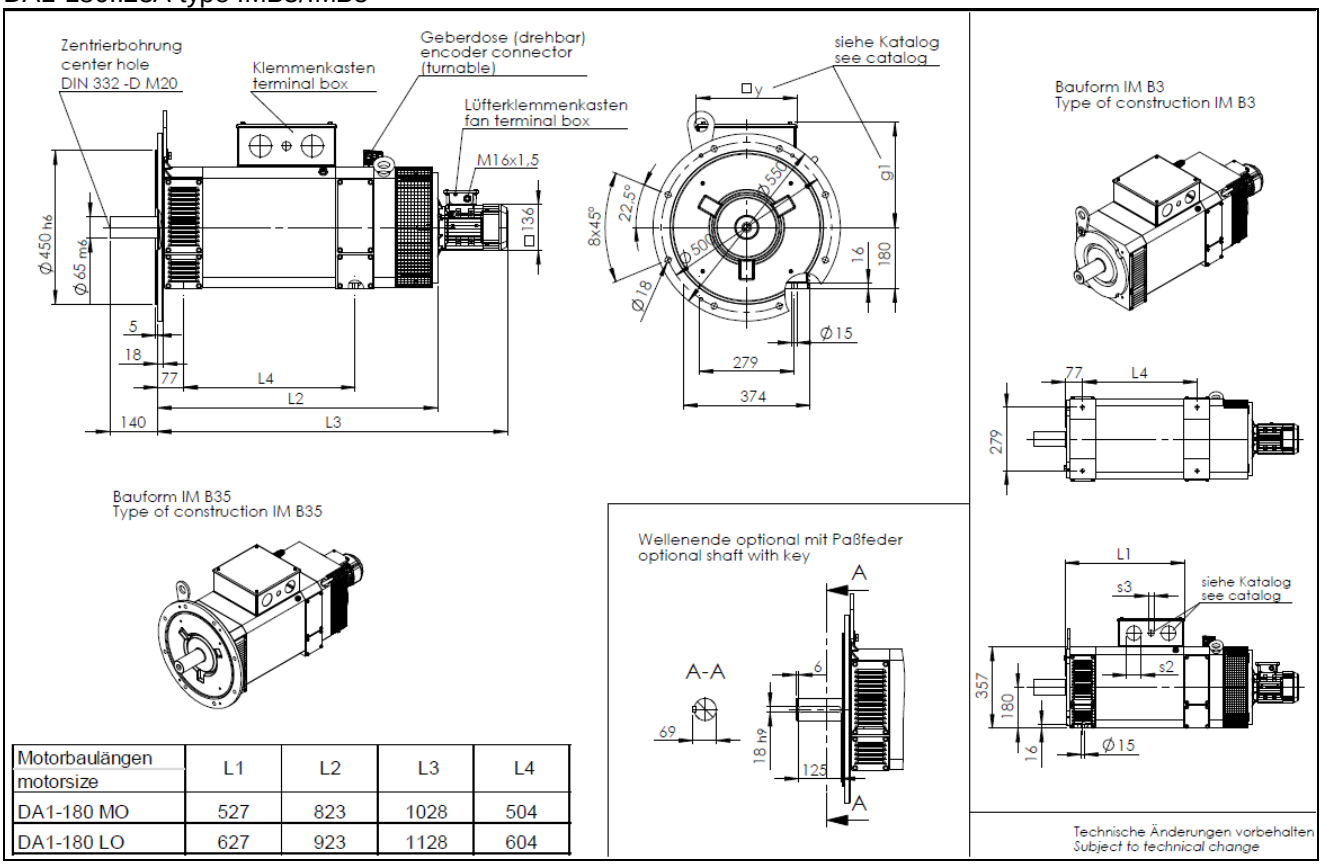

Motorbaulängen / motorsize	L1	L2	L3	L4
DA1-180 MO	527	823	1028	504
DA1-180 LO	627	923	1128	604

DA1-180..23I type IMB3/IMB5

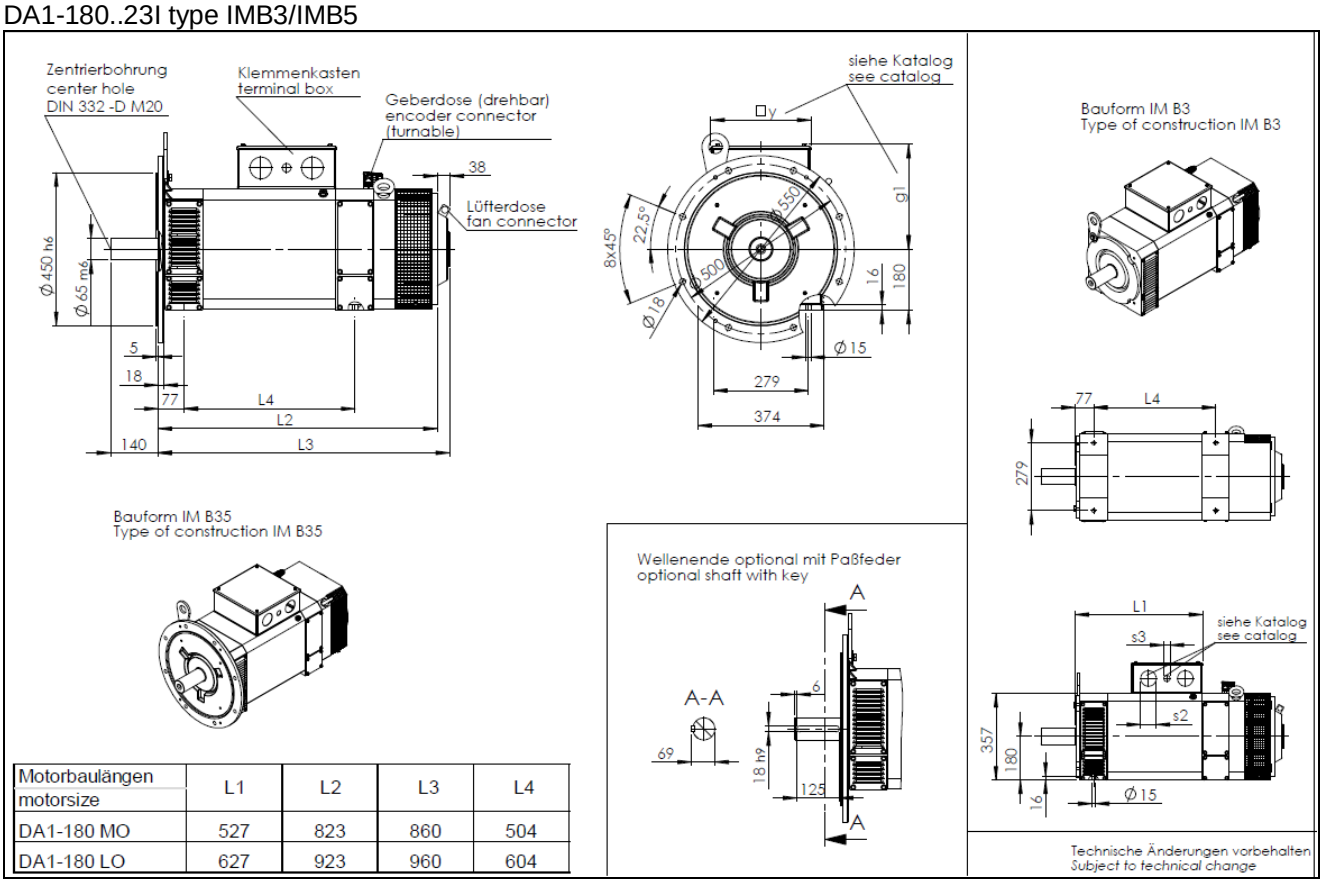

Motorbaulängen / motorsize	L1	L2	L3	L4
DA1-180 MO	527	823	860	504
DA1-180 LO	627	923	960	604

DA1-180..23R type IMB3/IMB5

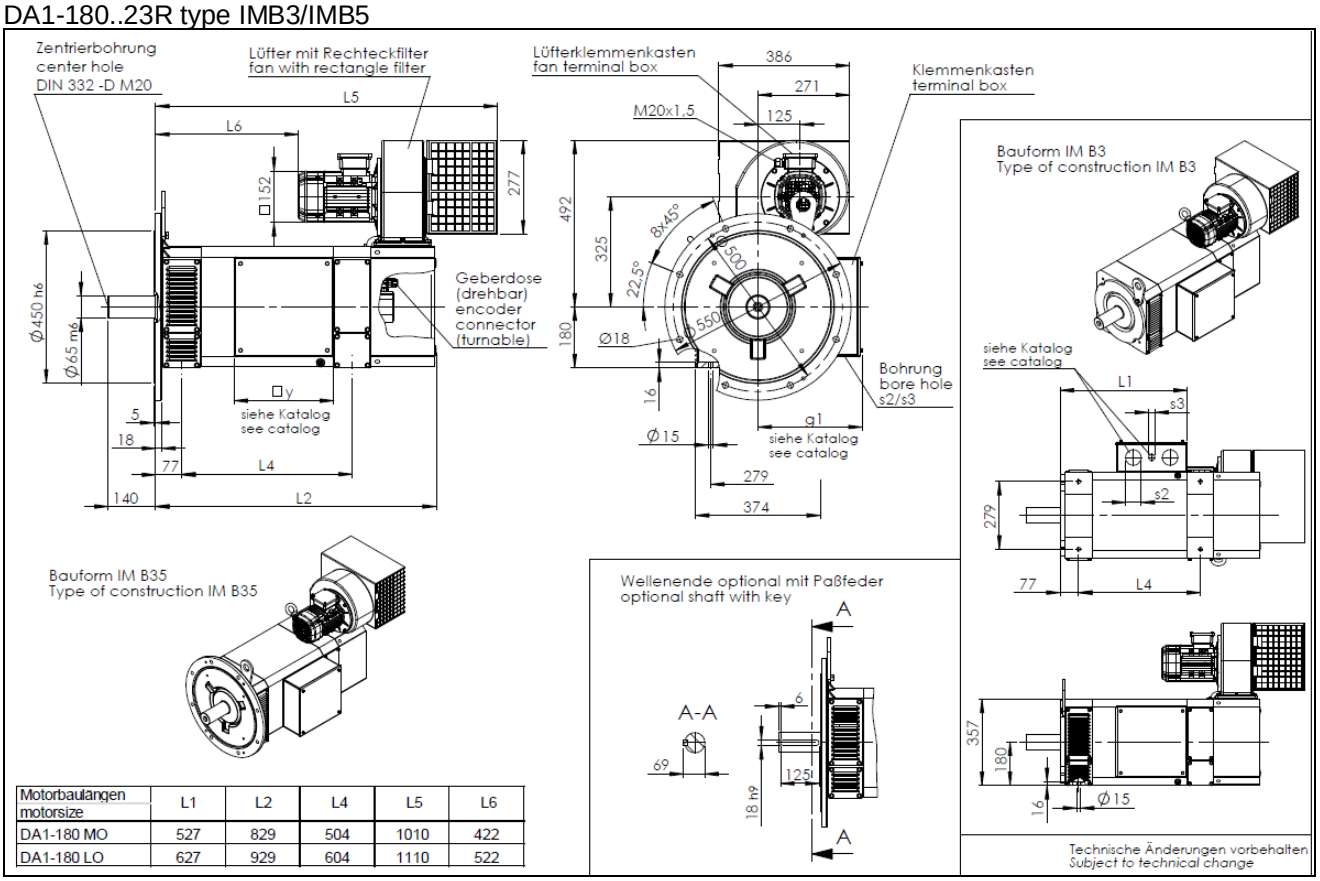

Motorbaulängen motorsize	L1	L2	L4	L5	L6
DA1-180 MO	527	829	504	1010	422
DA1-180 LO	627	929	604	1110	522

DA1-180..54A type IMB3/IMB5

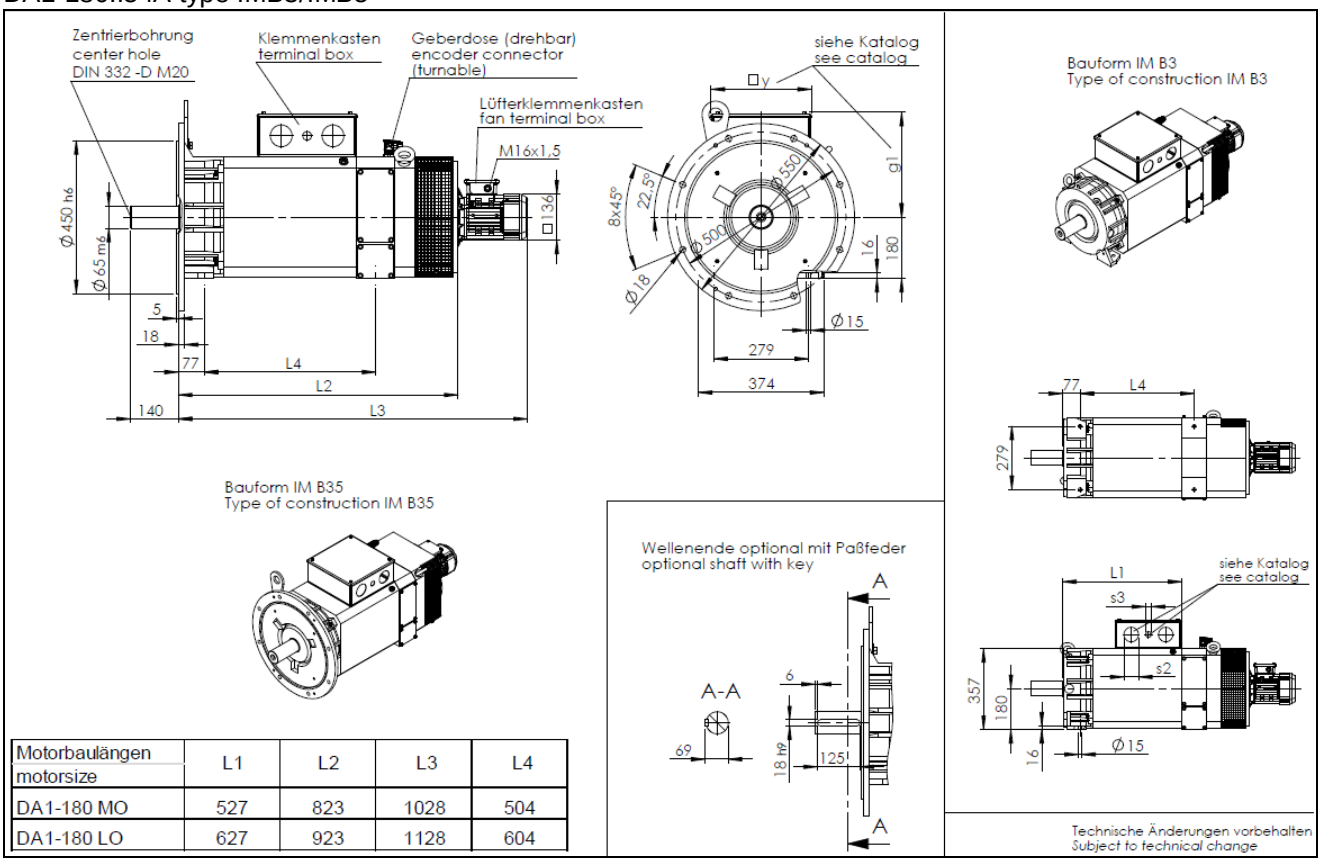

Motorbaulängen motorsize	L1	L2	L3	L4
DA1-180 MO	527	823	1028	504
DA1-180 LO	627	923	1128	604

DA1-180..54I type IMB3/IMB5

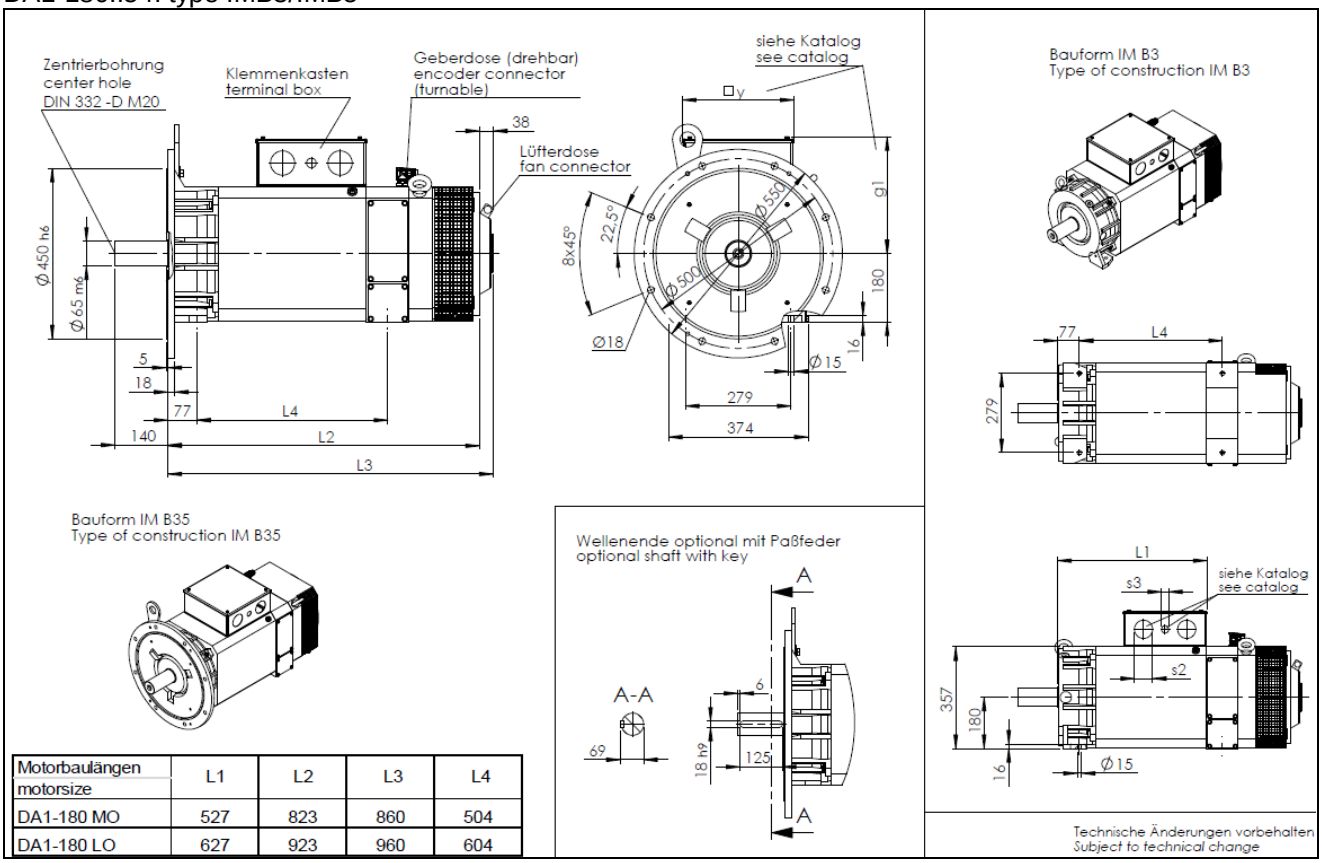

Motorbaulängen motorsize	L1	L2	L3	L4
DA1-180 MO	527	823	860	504
DA1-180 LO	627	923	960	604

DA1-180..54R type IMB3/IMB5

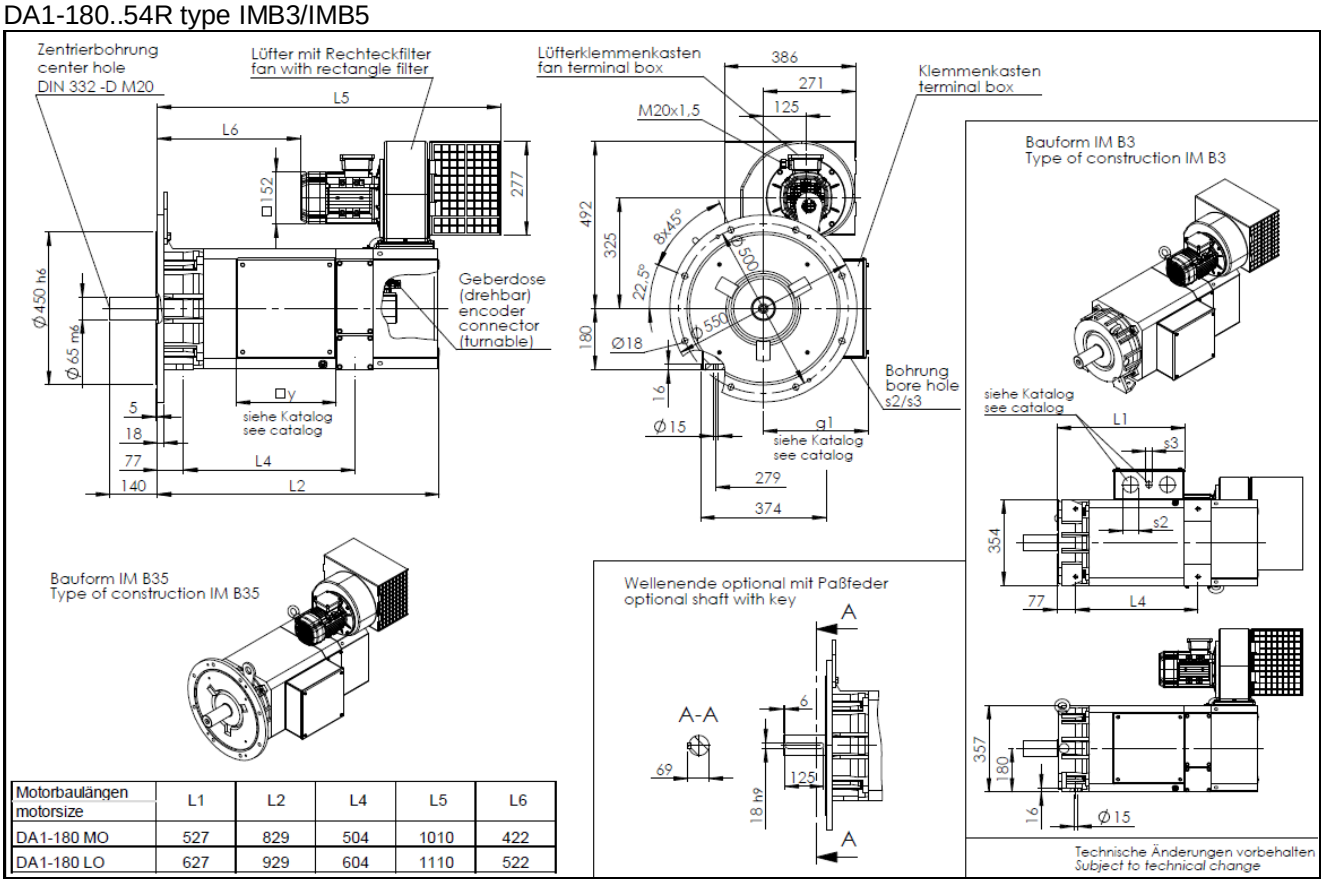

Motorbaulängen motorsize	L1	L2	L4	L5	L6
DA1-180 MO	527	829	504	1010	422
DA1-180 LO	627	929	604	1110	522

DA1-180..54W type IMB3/IMB5

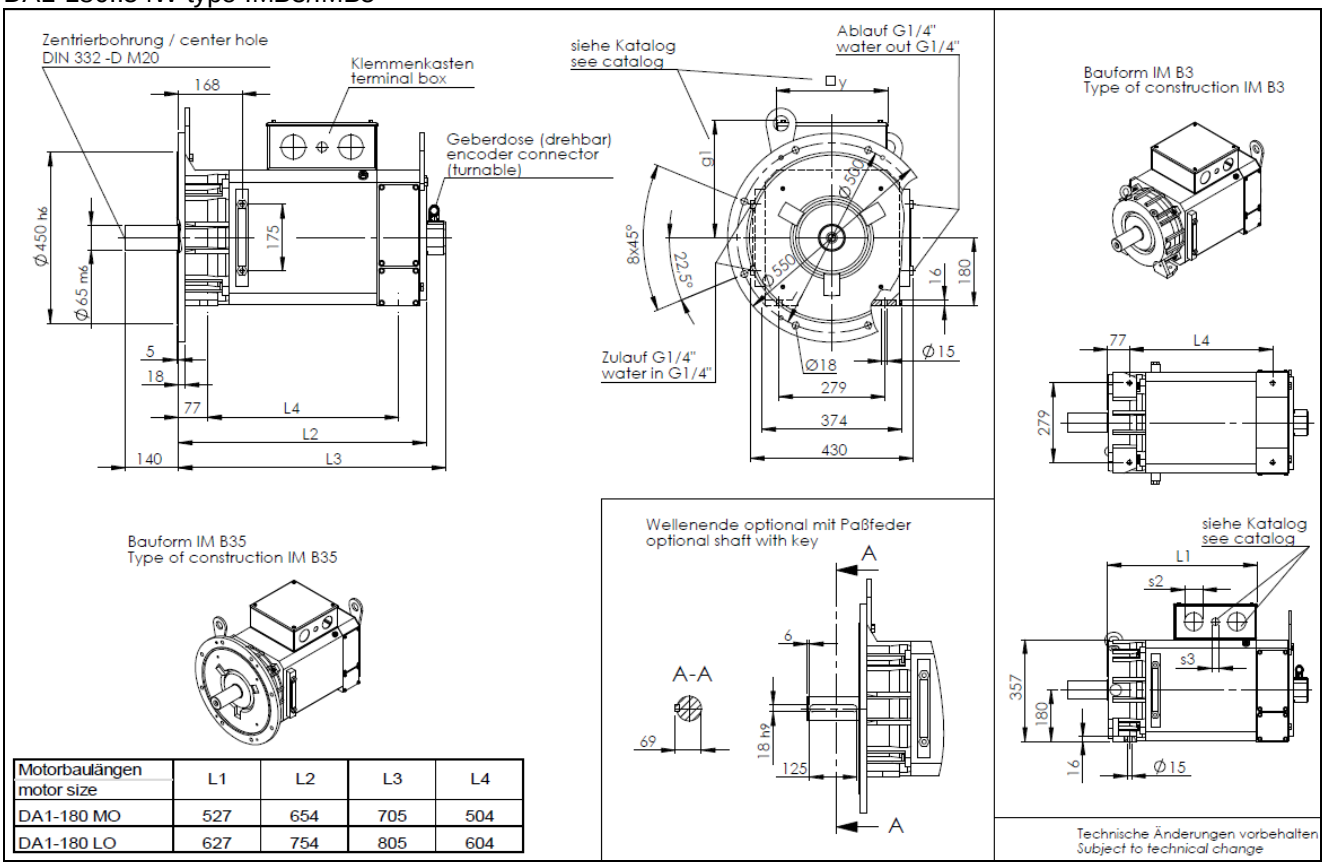

Motorbaulängen motor size	L1	L2	L3	L4
DA1-180 MO	527	654	705	504
DA1-180 LO	627	754	805	604

4.5. Dimension drawings DA1-225

DA1-225..23A type IMB3/IMB5

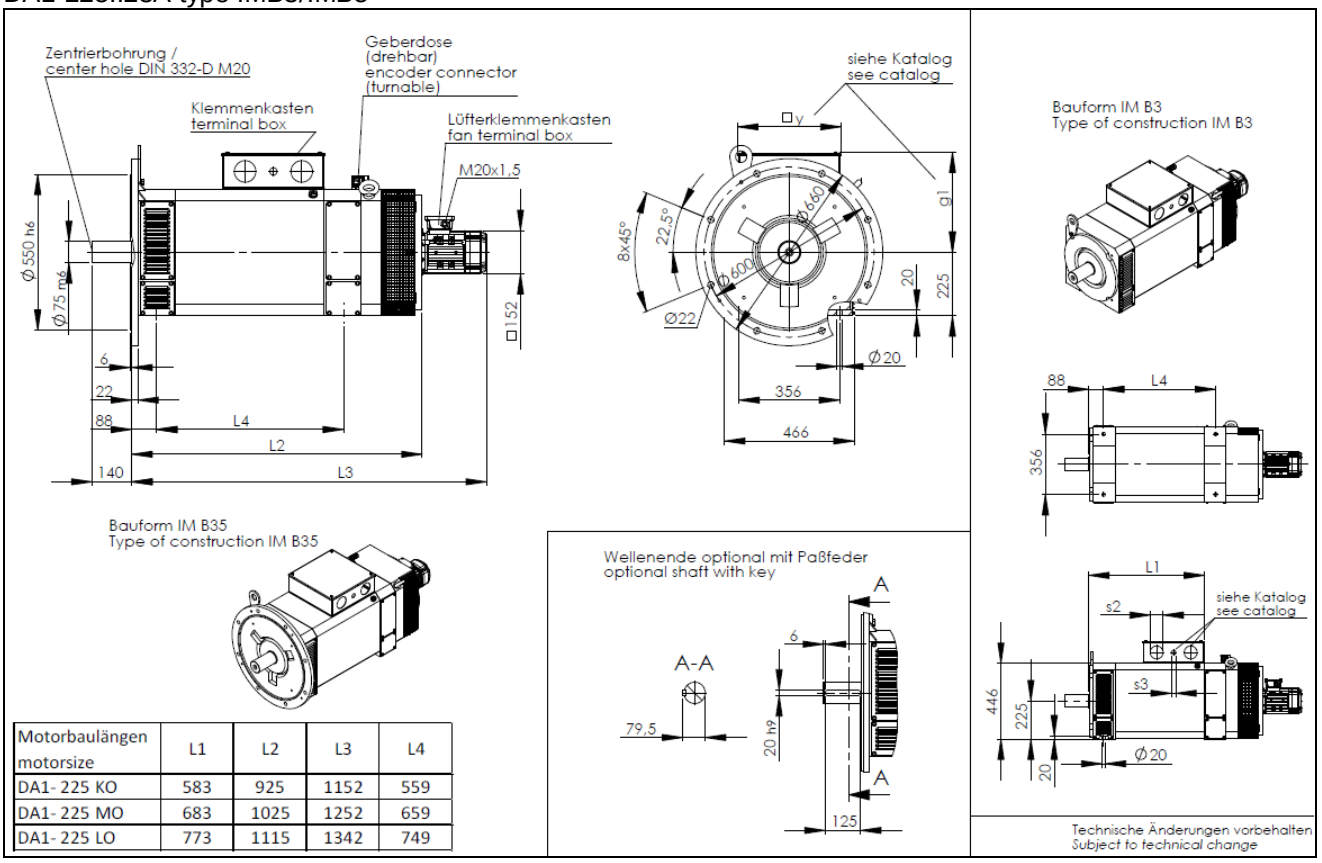

Motorbaulängen motorsize	L1	L2	L3	L4
DA1- 225 KO	583	925	1152	559
DA1- 225 MO	683	1025	1252	659
DA1- 225 LO	773	1115	1342	749

DA1-225..23I type IMB3/IMB5

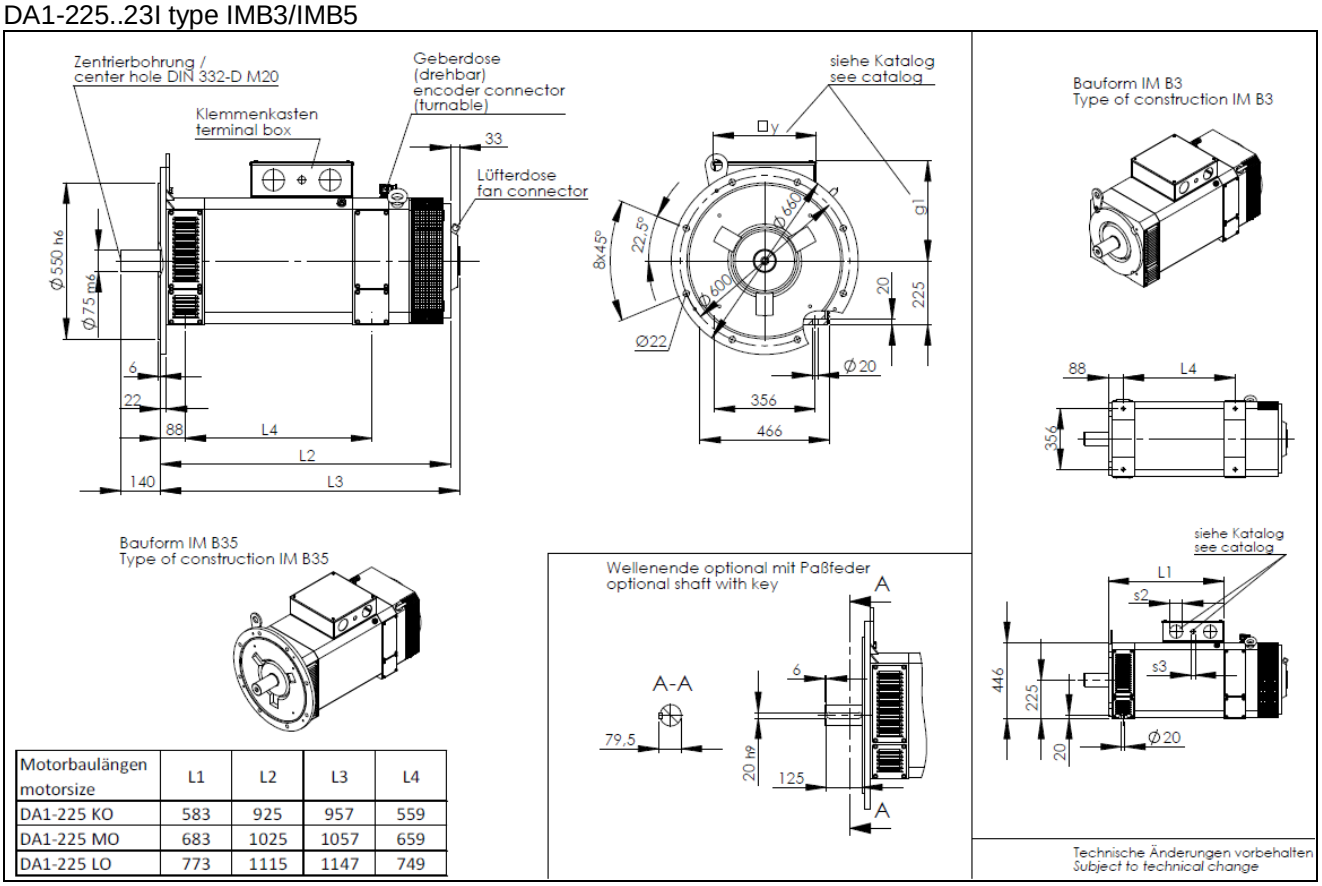

Motorbaulängen motorsize	L1	L2	L3	L4
DA1-225 KO	583	925	957	559
DA1-225 MO	683	1025	1057	659
DA1-225 LO	773	1115	1147	749

DA1-225..23R type IMB3/IMB5

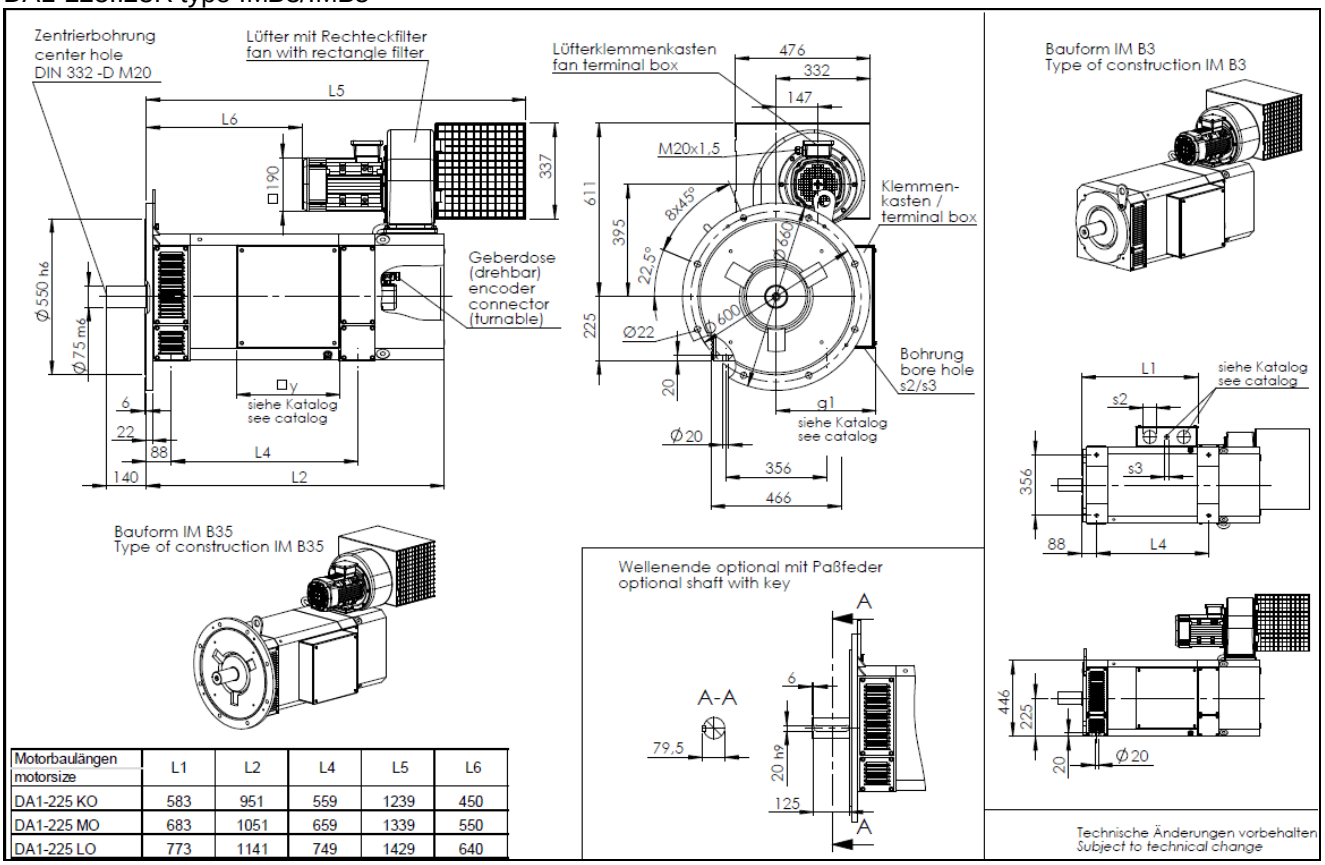

Motorbaulängen motorsize	L1	L2	L4	L5	L6
DA1-225 KO	583	951	559	1239	450
DA1-225 MO	683	1051	659	1339	550
DA1-225 LO	773	1141	749	1429	640

DA1-225..54A type IMB3/IMB5

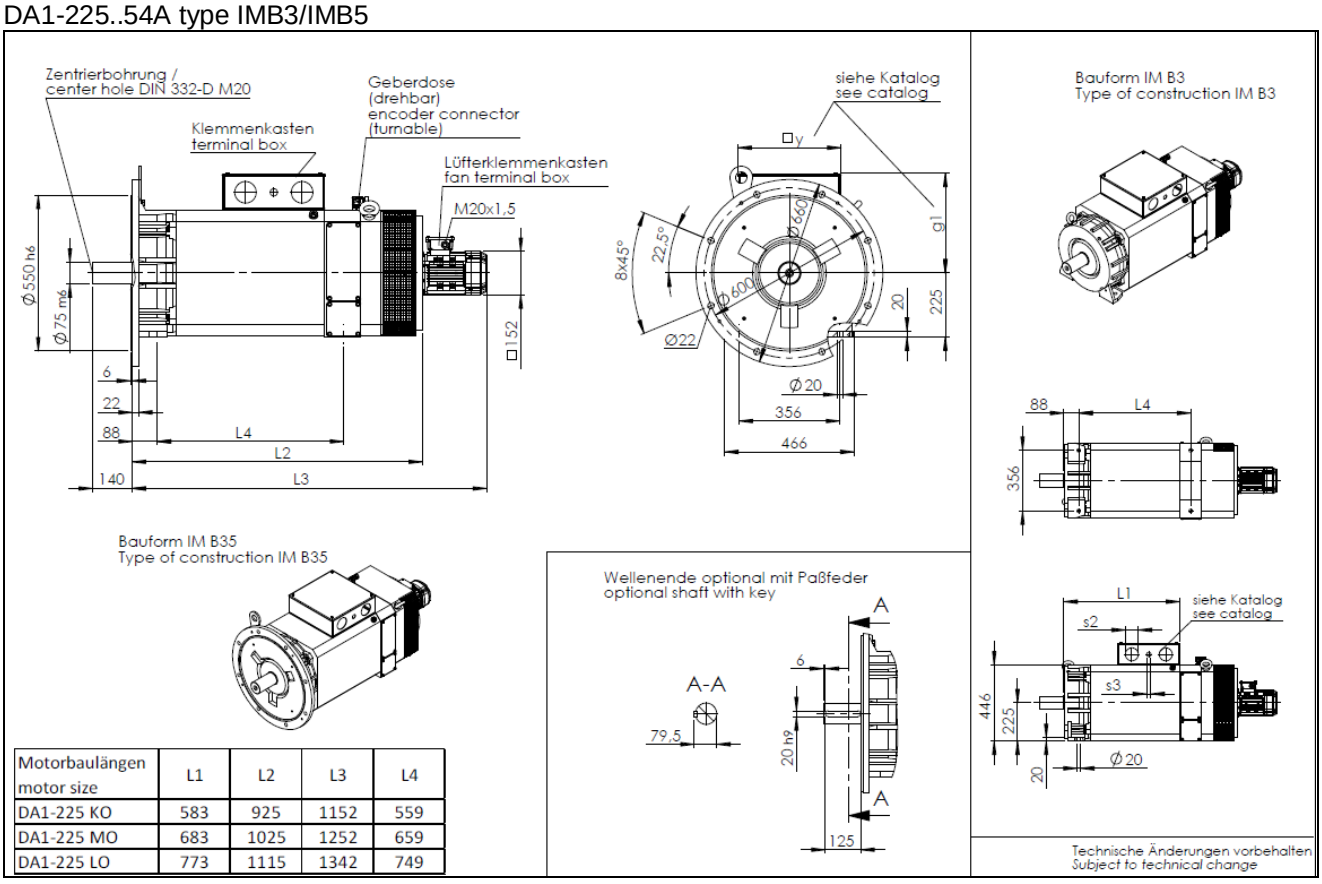

Motorbaulängen motor size	L1	L2	L3	L4
DA1-225 KO	583	925	1152	559
DA1-225 MO	683	1025	1252	659
DA1-225 LO	773	1115	1342	749

DA1-225..54I type IMB3/IMB5

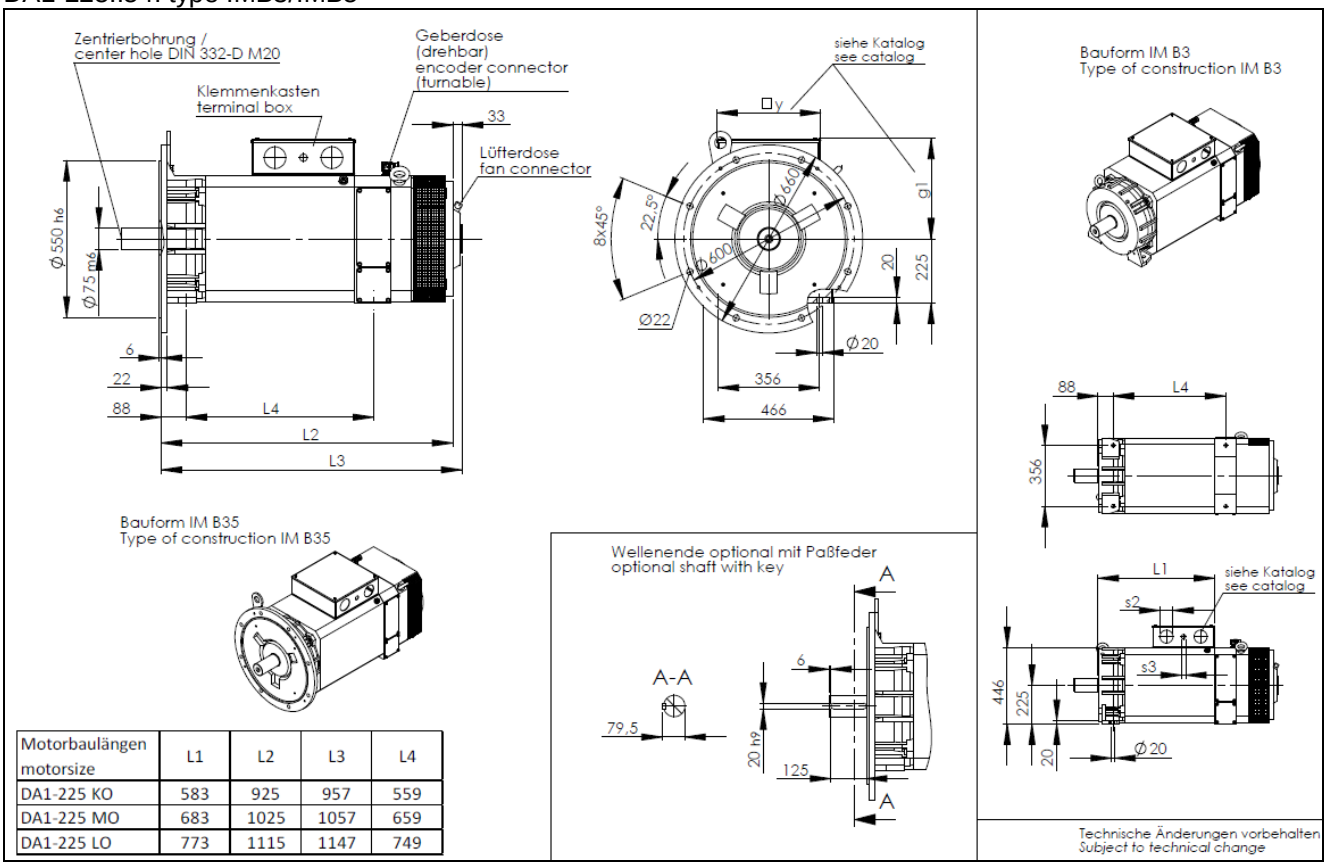

Motorbaulängen motorsize	L1	L2	L3	L4
DA1-225 KO	583	925	957	559
DA1-225 MO	683	1025	1057	659
DA1-225 LO	773	1115	1147	749

DA1-225..54R type IMB3/IMB5

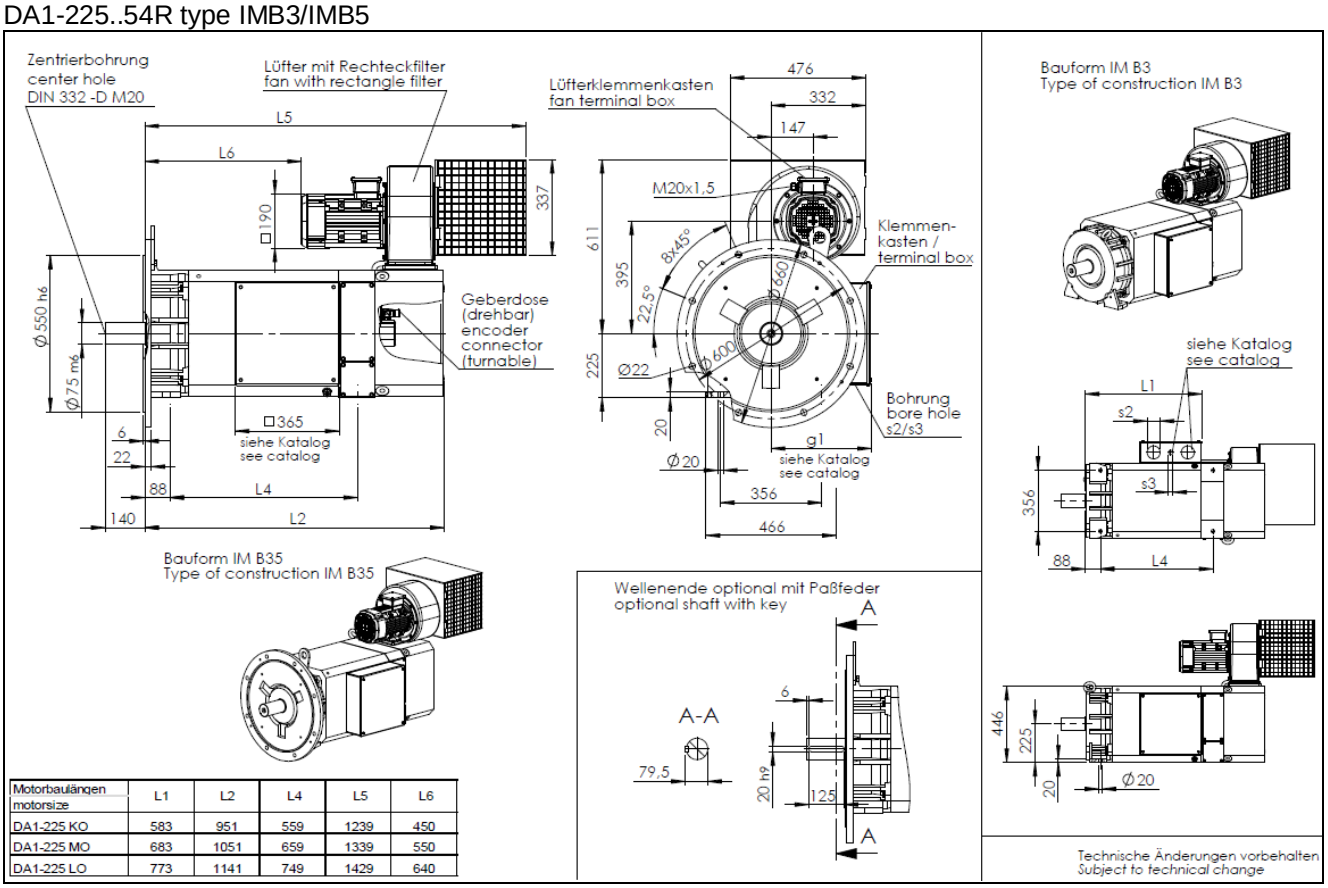

Motorbaulängen motorsize	L1	L2	L4	L5	L6
DA1-225 KO	583	951	559	1239	450
DA1-225 MO	683	1051	659	1339	550
DA1-225 LO	773	1141	749	1429	640

DA1-225..54W type IMB3/IMB5

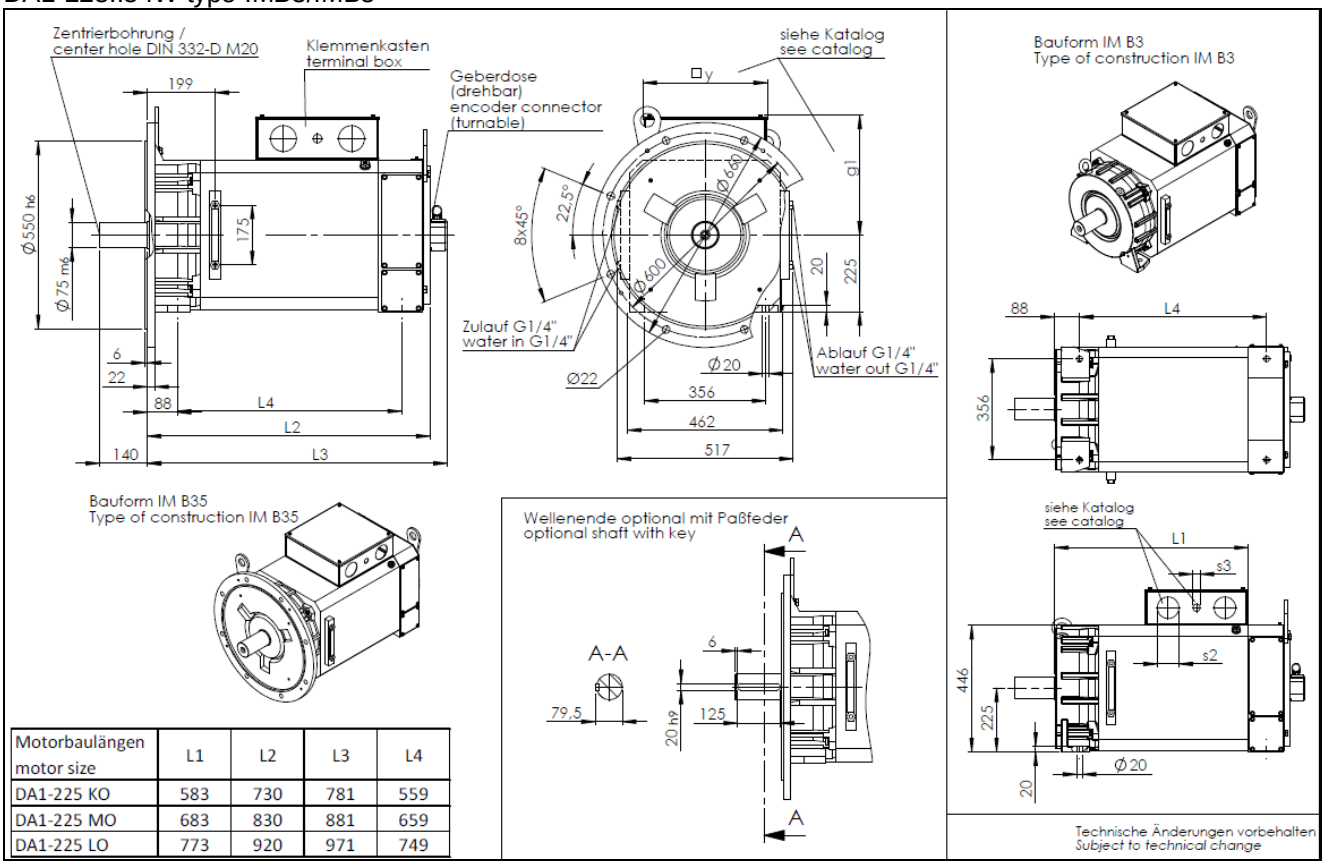

Motorbaulängen motor size	L1	L2	L3	L4
DA1-225 KO	583	730	781	559
DA1-225 MO	683	830	881	659
DA1-225 LO	773	920	971	749

4.6. Dimension drawings DA1-280

DA1-280..23R type IMB3

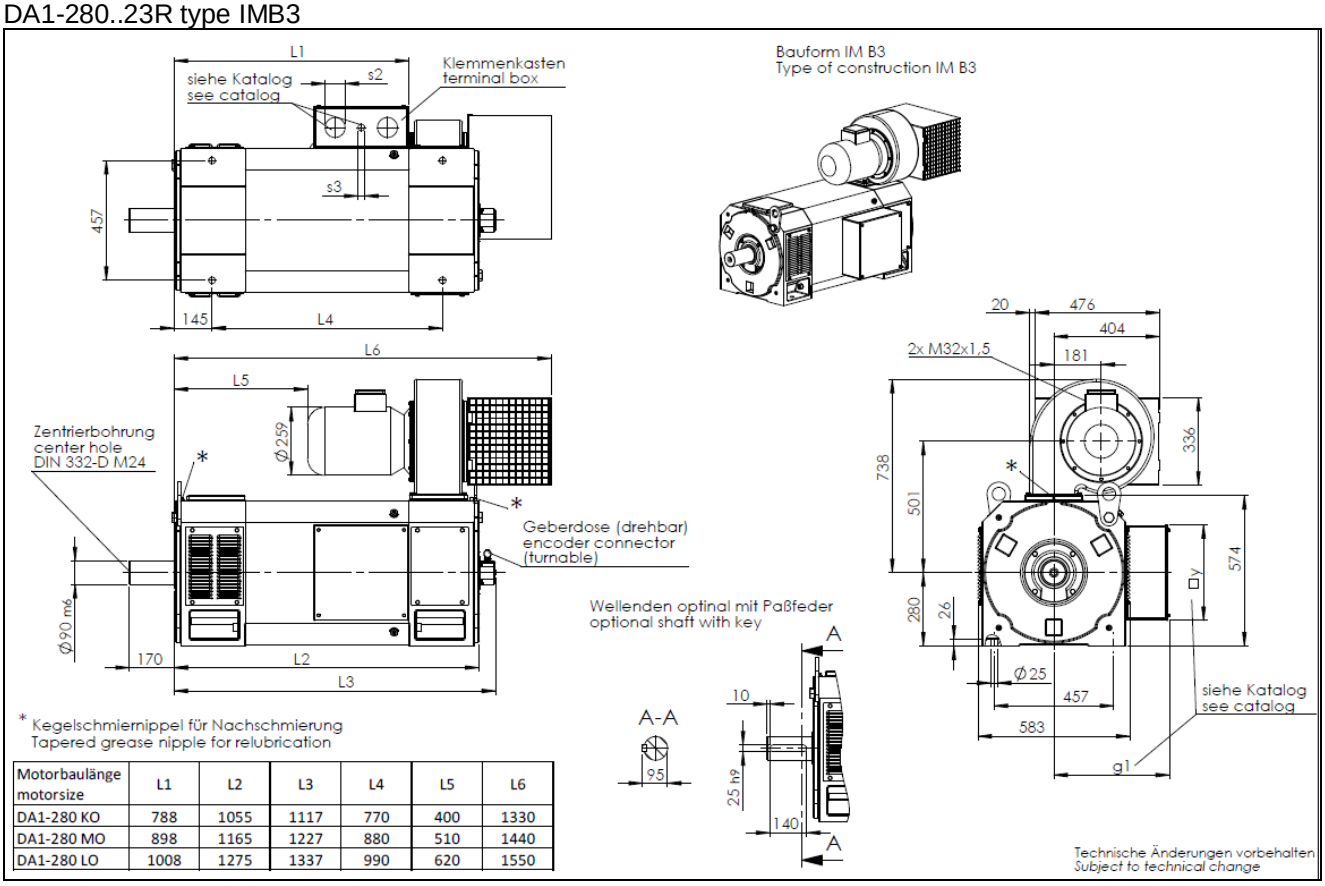

Motorbaulänge motorsize	L1	L2	L3	L4	L5	L6
DA1-280 KO	788	1055	1117	770	400	1330
DA1-280 MO	898	1165	1227	880	510	1440
DA1-280 LO	1008	1275	1337	990	620	1550

DA1-280..54W type IMB3

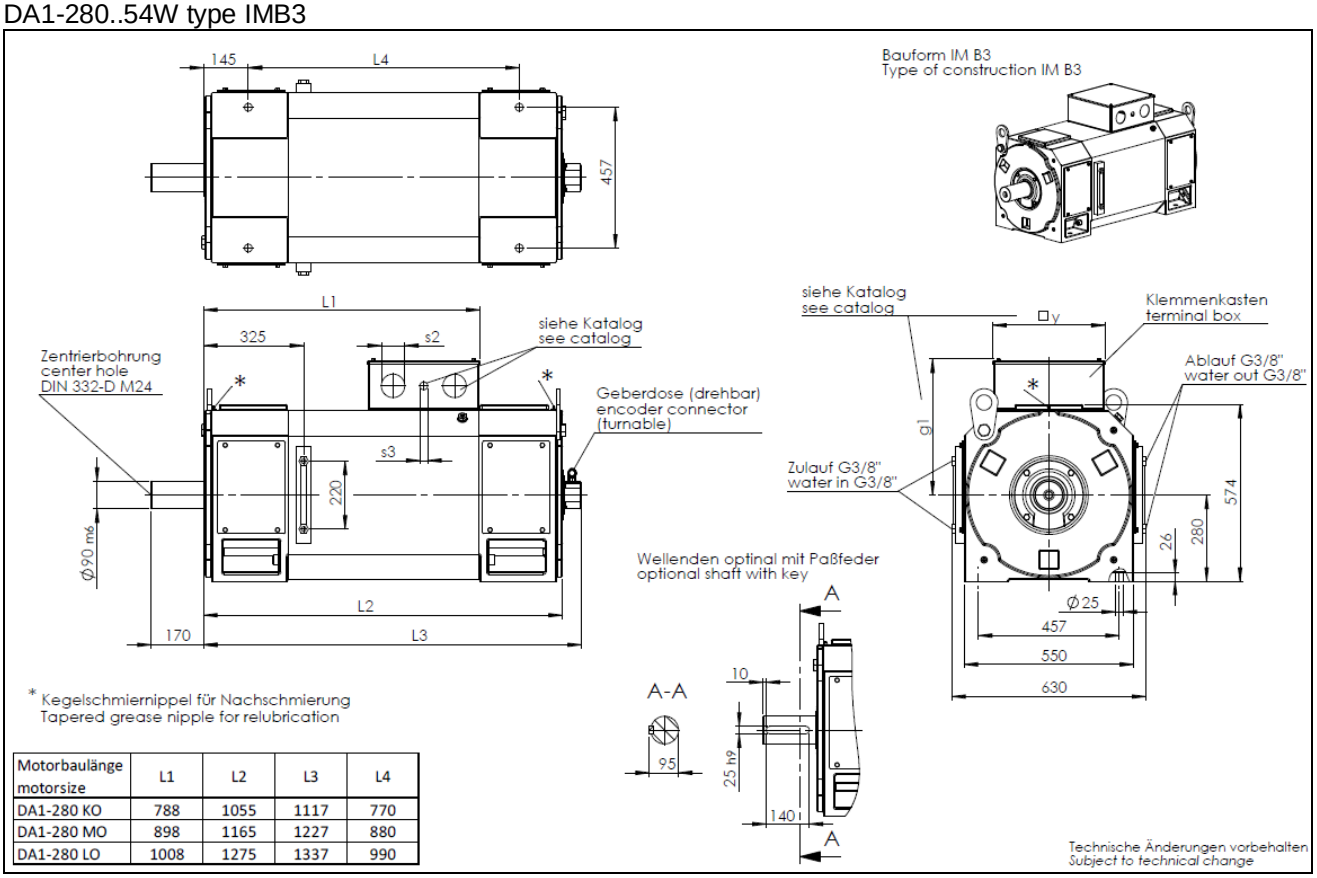

Motorbaulänge motorsize	L1	L2	L3	L4
DA1-280 KO	788	1055	1117	770
DA1-280 MO	898	1165	1227	880
DA1-280 LO	1008	1275	1337	990

5. Commissioning and maintenance instructions

When commissioning water-cooled motors, please request the Commissioning and Maintenance Instructions numbered 00612. Ventilated motors are covered by the Commissioning and Maintenance Instructions numbered 00609.

6. Declaration of Conformity

6.1. EU-Declaration of Conformity

CE

BAUMÜLLER

EU-Konformitätserklärung
gemäß

- **Richtlinie 2014/35/EU (Niederspannungsrichtlinie)**

  Richtlinie 2014/30/EU (EMV-Richtlinie)

Hersteller

Baumüller Nürnberg GmbH
Ostendstr. 80 - 90
90482 Nürnberg
Deutschland
Tel. +49 9 11 54 32 - 0
Fax: +49 9 11 54 32 - 1 30
E-Mail: mail@baumueller.de
Internet: www.baumueller.de

Hiermit erklären wir, dass die nachfolgend genannten Produkte aufgrund ihrer Konzeption, Konstruktion und Bauart in der von uns in Verkehr gebrachten Ausführung den Anforderungen der oben genannten Richtlinien einschließlich der zum Zeitpunkt der Erklärung geltenden Änderungen entsprechen.

Hinweise:

1. Bei Umbau oder Änderungen am Produkt verliert diese Erklärung mit sofortiger Wirkung ihre Gültigkeit.

2. Diese Erklärung bescheinigt die Übereinstimmung mit der genannten Richtlinie, stellt aber keine Zusicherung von darüber hinaus gehenden Produkteigenschaften dar.

3. Diese Konformitätserklärung wird unter der alleinigen Verantwortung des Herstellers ausgestellt.

Angewandte harmonisierte Normen:

- EN 60034-1:2010 + Cor.:2010
  Drehende elektrische Maschinen – Teil 1:
  Bemessung und Betriebsverhalten
- EN 60034-5:2001 + A1:2007
  Drehende elektrische Maschinen – Teil 5:
  Schutzarten aufgrund der Gesamtkonstruktion von drehenden elektrischen Maschinen (IP-Code) – Einteilung
- EN 60034-6:1993
  Drehende elektrische Maschinen – Teil 6:
  Einteilung der Kühlverfahren (IC-Code)

(Wird fortgesetzt auf der nächsten Seite ...)

EU-Declaration of Conformity
according

- **Directive 2014/35/EU (Low-voltage-directive)**

  Directive 2014/30/EU (EMC-directive)

Manufacturer

Baumüller Nürnberg GmbH
Ostendstr. 80 - 90
90482 Nürnberg
Germany
Tel. +49 9 11 54 32 - 0
Fax: +49 9 11 54 32 - 1 30
E-Mail: mail@baumueller.de
Internet: www.baumueller.de

We declare, that the products referred to in the following conform in their concept, construction and design as lauched by us to the above mentioned directives and their respective changes which were valid at the point of declaration.

Notes:

1. By modifying or alternating the device(s) this declaration immediately becomes invalid.

2. This declaration confirms the compliance with the directive listed, but it is no covenant of any further product properties.

3. This declaration of conformity is issued under the sole responsibility of the manufacturer.

Applied harmonised standards:

- EN 60034-1:2010 + Cor.:2010
  Rotating electrical machines – Part 1:
  Rating and performance
- EN 60034-5:2001 + A1:2007
  Rotating electrical machines – Part 5:
  Degree of protection provided by the integral design of rotating electrical machines (IP-Code) – Classification
- EN 60034-6:1993
  Rotating electrical machines – Part 6:
  Methods of cooling (IC-Code)

(To be continued on the next page ...)

FM_0009, Version 3.0 Seite 1 von 2

(... Fortsetzung von der vorherigen Seite)

- EN 60034-9:2005 + A1:2007
  Drehende elektrische Maschinen – Teil 9:
  Geräuschgrenzwerte
- EN IEC 60034-14:2018
  Drehende elektrische Maschinen – Teil 14:
  Mechanische Schwingungen von bestimmten Maschinen mit einer Achshöhe von 56 mm und höher – Messung, Bewertung und Grenzwerte der Schwingstärke
- EN 61800-5-1:2007 + A1:2017
  Elektrische Leistungsantriebssysteme mit einstellbarer Drehzahl – Teil 5-1:
  Anforderungen an die Sicherheit – Elektrische, thermische und energetische Anforderungen
- EN 60204-1:2018
  Sicherheit von Maschinen - Elektrische Ausrüstung von Maschinen - Teil 1:
  Allgemeine Anforderungen

(... continued from the previous page)

- EN 60034-9:2005 + A1:2007
  Rotating electrical machines – Part 9:
  Noise limits
- EN IEC 60034-14:2018
  Rotating electrical machines – Part 14:
  Mechanical vibration of certain machines with shaft heights 56 mm and higher – Measurement, evaluation and limits of vibration severity
- EN 61800-5-1:2007 + A1:2017
  Adjustable speed electrical power drive systems – Part 5-1:
  Safety requirements – Electrical, thermal and energy
- EN 60204-1:2018
  Safety of machinery - Electrical equipment of machines - Part 1:
  General requirements

Markenname: Baumüller
Produktbezeichnung: Drehstrommotor

Brand Name: Baumüller
Product Name: AC motor

Produkt / Product (x): optionaler Buchstabe / optional character {x, y}: alternative Buchstaben oder Zahlen / alternative characters	**Jahr der erstmaligen CE-Kennzeichnung / Year of first CE marking**
DA1-100XXXXX-XX-X-XXX-X-XXX-XXX-XX-X-XXX **DA1-132XXXXX-XX-X-XXX-X-XXX-XXX-XX-X-XXX** **DA1-160XXXXX-XX-X-XXX-X-XXX-XXX-XX-X-XXX** **DA1-180XXXXX-XX-X-XXX-X-XXX-XXX-XX-X-XXX** **DA1-225XXXXX-XX-X-XXX-X-XXX-XXX-XX-X-XXX** **DA1-280XXXXX-XX-X-XXX-X-XXX-XXX-XX-X-XXX**	**2018**

Nürnberg, 09.10.2019

i.V. Michael Veeh

Entwicklungsleiter Motoren
Manager R&D Motors

Dipl.-Ing.(FH)Stefan Buchner

Geschäftsbereichsleitung Produktion
Business Unit Manager Production

FM_0009, Version 3.0

Seite 2 von 2

6.2. UKCA Declaration of Conformity

UK CA

BAUMÜLLER

UKCA-Declaration of Conformity according

- **Electrical Equipment Regulation 2016 (Statutory Instrument 2016/1101)**
- **Electromagnetic Compability Regulation 2016 (Statutory Instrument 2016/1091)**

Manufacturer

Baumüller Nürnberg GmbH
Ostendstr. 80 - 90
90482 Nürnberg
Germany
Phone +49 9 11 54 32 - 0
Fax: +49 9 11 54 32 - 1 30
E-Mail: mail@baumueller.de
Internet: www.baumueller.de

Branch office UK

Baumüller (UK) Ltd.
Units 2&3, Aurora Stockport, Baecon Way
SK3 0EF Romiley
United Kingdom
Phone: +44 161 432 78 24
Fax: +44 161 432 8493
E-Mail: mail@baumueller.co.uk
Internet: www.baumueller-services.com/uk

We declare, that the products referred to in the following conform in their concept, construction and design as lauched by us to the above mentioned directives and their respective changes which were valid at the point of declaration.

Notes:

1. *By modifying or alternating the device(s) this declaration immediately becomes invalid.*
2. *This declaration confirms the compliance with the directive listed, but it is no covenant of any further product properties.*
3. *This declaration of conformity is issued under the sole responsibility of the manufacturer.*
4. *responsibility of the manufacturer This motor series isn't in scope of guideline 2005/32/EG*

Applied harmonised standards:

- **BS EN 60034-1:2010**
  Rotating electrical machines – Part 1:
  Rating and performance
- **BS EN 60034-5:2020**
  Rotating electrical machines – Part 5:
  Degrees of protection provided by the integral design of rotating electrical machines (IP code). Classification
- **BS EN 60034-6:1994**
  Rotating electrical machines – Part 6:
  Methods of cooling (IC-Code)
- **BS EN 60034-9:2005**
  Rotating electrical machines – Part 9:
  Noise limits
- **BS EN IEC 60034-14:2018**
  Rotating electrical machines – Part 14:
  Mechanical vibration of certain machines with shaft heights 56 mm and higher. Measurement, evaluation and limits of vibration severity. The following applies to roller bearing motors : Based on EN 60034-14 or requirements according to customer agreement.

(To be continued on the next page ...)

FM_0009, Version 3.0

Seite 1 von 2

(... continued from the previous page)

- **BS EN 61800-5-1:2007 + A11:2021**
  Adjustable speed electrical power drive systems – Part 5-1:
  Safety requirements – Electrical, thermal and energy

- **BS EN 60204-1:2018**
  Safety of machinery - Electrical equipment of machines - Part 1:
  General requirements

Brand Name: Baumüller
Product Name: AC motor

Produkt / Product (x): optionaler Buchstabe / optional character (x, y): alternative Buchstaben oder Zahlen / alternative characters	**Jahr der erstmaligen CE-Kennzeichnung / Year of first CE marking**
DS 3 Phase AC Servomotoren **DS (x)(x)-xxx-x-x-x** **GN(A,F)xxxx(S,M,L)N** **DSC1-XXXXXXXX-XX-XX-XXX-XXX-X-XX-X-XXX** **DSH1-XXXXXXXX-XX-XX-XXX-XXX-X-XX-X-XXX** **DSP1-XXXXXXXX-XX-XX-XXX-XXX-X-XX-X-XXX** **HYG1-XXXXXXXX-XX-XX-XXX-XXX-X-XX-X-XXX** **DS2--XXXXXXXX-XX-XX-XXX-XXX-X-XX-X-XXX** **DSD2-XXXXXXXX-XX-XX-XXX-XXX-X-XX-X-XXX** **DST2-XXXXXXXX-XX-XX-XXX-XXX-X-XX-X-XXX** **DA1- XXXXXXXX-XX-XX-XXX-XXX-X-XX-X-XXX**	**2022**

Nürnberg, 05.04.2022

Dr.-Ing. Michael Wengler
Director

ppa. Matthias Barth
Manager R&D

FM_0009, Version 3.0

Seite 2 von 2

HOUSE OF AUTOMATION



Baumüller Nürnberg GmbH

Ostendstraße 80 – 90 · 90482 Nürnberg · Germany
Phone: +49 (0) 911 5432 - 0 · Fax: +49 (0) 911 5432 - 130
www.baumueller.com

Alle Angaben in diesem Dokument sind unverbindliche Kundeninformationen, unterliegen einer ständigen Weiterentwicklung und werden fortlaufend durch unseren permanenten Änderungsdienst aktualisiert. Bitte beachten Sie, dass Angaben/Zahlen/Informationen aktuelle Werte zum Druckdatum sind. Zur Ausmessung, Berechnung und Kalkulationen sind diese Angaben nicht rechtlich verbindlich. Bevor Sie in diesem Dokument aufgeführte Informationen zur Grundlage eigener Berechnungen und/oder Verwendungen machen, informieren Sie sich bitte, ob Sie den aktuellsten Stand der Information besitzen. Eine Haftung für die Richtigkeit der Informationen wird daher nicht übernommen.

All data/information and particulars given in this document is non-binding customer information, subject to constant further development and continuously updated by our permanent alteration service. Please note that all particulars/figures/information is current data at the date of printing. These particulars are not legally binding for the purpose of measurement, calculation or cost accounting. Prior to using any of the information contained in this document as a basis for your own calculations and/or applications, please inform yourself about whether the information you have at your disposal is up to date. Therefore, no liability is assumed for the correctness of the information.